08 January 2025
Version 1.7

Hilltip

SnowSTRIKER™

OWNER'S MANUAL

STRAIGHT-BLADE & V-PLOW

This manual replaces all editions with an earlier date.

Table of contents

TECHNICAL SPECIFICATIONS 4
SAFETY 5
Safety instructions 5
Warning and caution labels. 6
INSTALLATION INSTRUCTIONS 7
Vehicle harness 7
Plow harness placement. 8
Push beam installation height. 9
A-frame alignment 9
OPERATING INSTRUCTIONS. 10
Motor valve 10
Quick hitch instructions. 11
Joystick 12
Error codes 14
Maintenance 15
MECHANICS GUIDE. 16
Valve Electrical functions - Straight-blade. 16
Valve Electrical functions - V-plow 17
Hydraulic schematics - Straight-blade 18
Hydraulic schematics - V-plow 19
Straight blade plow side electrical schematics 20
V-plow plow side electrical schematics. 21
Vehicle side electrical schematics 22
Straight blade UTV plow side electrical schematics 23
V-plow UTV plow side electrical schematics. 24
Vehicle side UTV electrical schematics 25
WARRANTY INFORMATION 26
DECLARATION OF CONFORMITY. 27

CAUTION - Read this manual before installing or operating the snowplow

Technical specifications

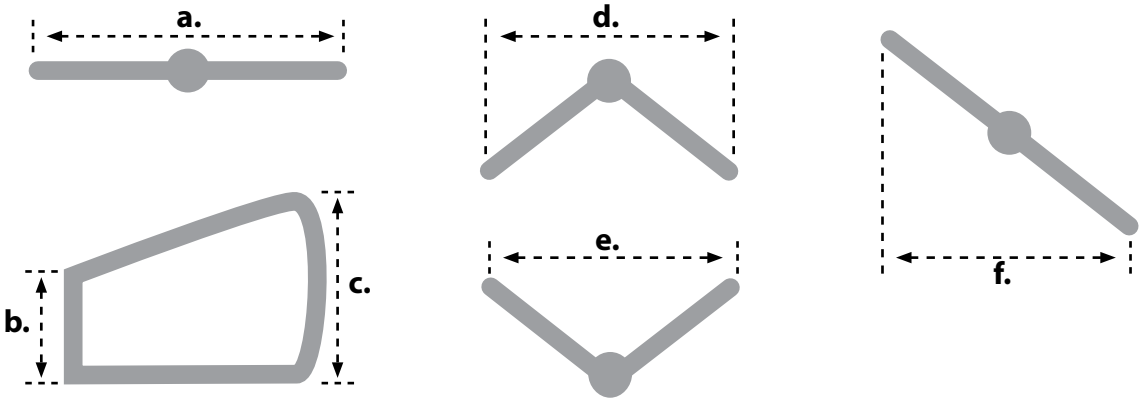

Straight-blade	1650-SP	1850-SP	2100-SP	2250-SP	2400-SP	2600-SP
Width (a.)	1650 mm	1850 mm	2100 mm	2250 mm	2400 mm	2600 mm
Height (b. & c.)	550 mm	550 mm	550 mm	550 mm	550 mm	650 mm
Width, windrow position (f.)	1400 mm	1600 mm	1850 mm	2000 mm	2150 mm	2350 mm
Weight	128 kg	135 kg	140 kg	145 kg	160 kg	180 kg

V-plow	1650-VP	1850-VP	2100-VP	2250-VP	2400-VP	2600-VP
Width (a.)	1650 mm	1850 mm	2100 mm	2250 mm	2400 mm	2600 mm
Height, center (b.)	550 mm	550 mm	550 mm	550 mm	550 mm	650 mm
Height, outer edge (c.)	630 mm	655 mm	670 mm	680 mm	700 mm	800 mm
Width, v-position (d.)	1450 mm	1600 mm	1850 mm	2000 mm	2150 mm	2350 mm
Width, scoop position (e.)	1450 mm	1600 mm	1850 mm	2000 mm	2150 mm	2350 mm
Width, windrow position (f.)	1450 mm	1600 mm	1850 mm	2000 mm	2150 mm	2350 mm
Weight	135 kg	142 kg	149 kg	155 kg	168 kg	185 kg

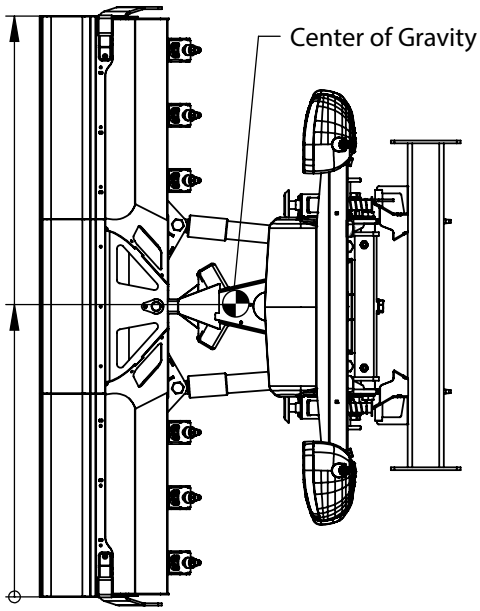

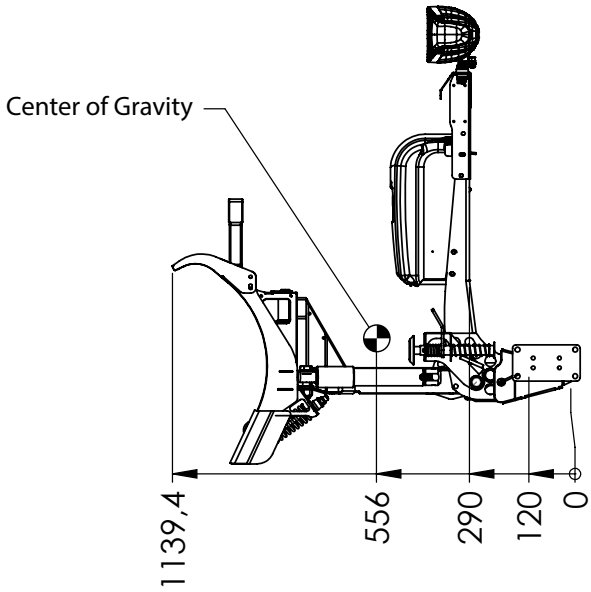

Safety instructions

Incorrect installation and operation can lead to serious personal injury and/or damage your equipment and property. Note and ensure that you understand this manual and all the labels before installing, operating or making adjustments to the snowplow.

WARNING

Observe these safety precautions before, during and after operating the snowplow. You can prevent injury to persons and damage to the plow by following these precautions.

Personal safety

- To prevent accidents, secure long hair and do not wear jewelry or necktie, only wear tight-fitting clothes while working on your plow or vehicle.
- Protect your eyes with safety goggles to avoid damage from battery acid, gasoline, dirt and dust.

WARNING

Before operating snowplow:

- Read this manual before operating the snowplow.
- Make sure that your vehicle total weight is not exceeded beyond payload limits.
- Inspect hydraulic components and hoses
- Check the snowplow and its components for cracks and defects before every plowing-session
- Replace any damaged or worn parts, a snowplow in need of repairs or maintenance should not be operated.
- Make sure the equipment is securely and correctly mounted.

WARNING

While operating snowplow:

- Make sure that bystanders keep a safe distance (3 m) when the blade is being operated, raised, lowered or angle. Don't stand between vehicle and blade, a moving or falling blade can cause personal injury.
- Transport speed should not exceed 70km/h
- Plowing speed should not exceed 15 km/h

WARNING

Maintenance of the snowplow:

- Before removing or replacing any electrical components, always disconnect the battery.
- Use a piece of cardboard or wood to detect a suspected hose leak. Do NOT use your hand to locate it, hydraulic fluid can damage your skin.

See page 15 for maintenance checklist

WARNING

After operating snowplow:

- Lower the plow when vehicle is parked. The hydraulic pressure can change if temperature changes, causing an unexpected plow drop which can lead to plow damage or personal injury.

Warning and caution labels

Please become familiar with these warning and caution labels on the plow.

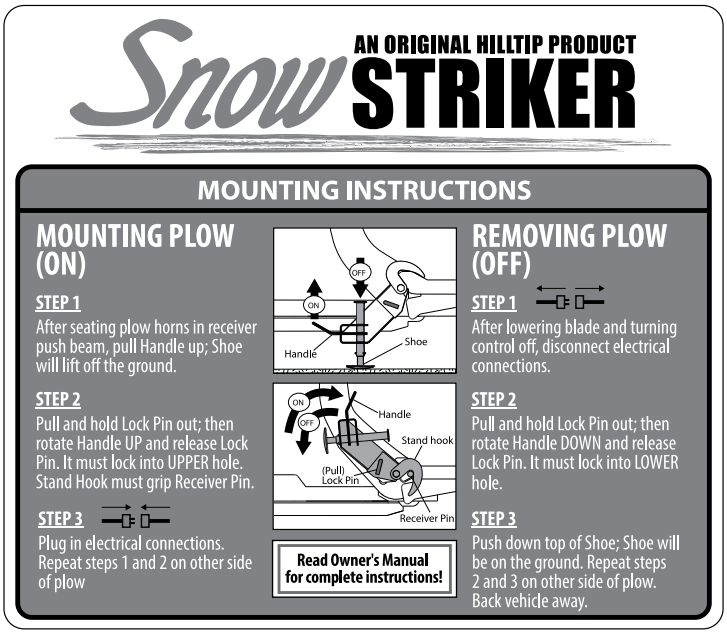

Vehicle harness

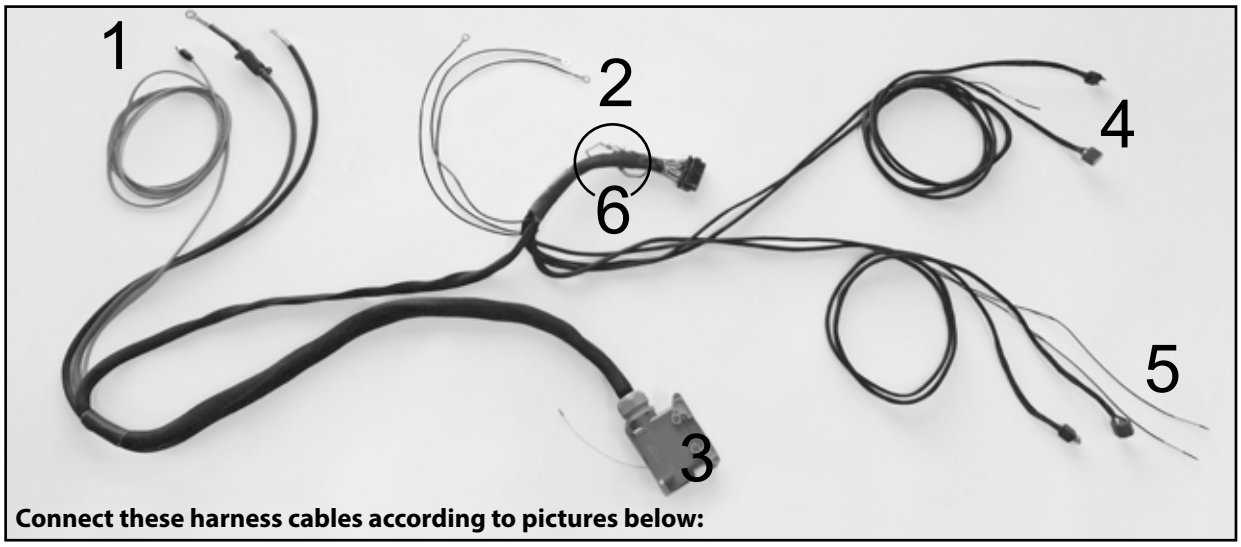

Connect these harness cables according to pictures below:

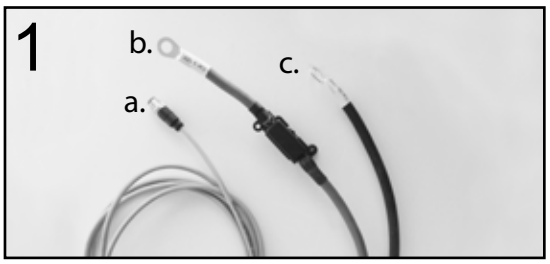

1a. Joystick cable **1b.** Car + 12V (red)
1c. Car ground

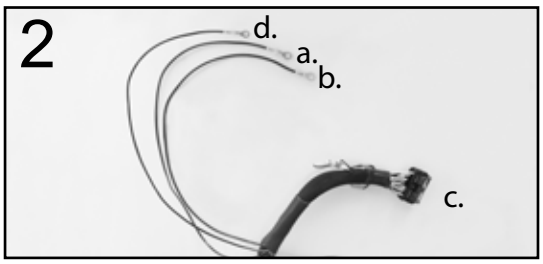

2a. Car +12V (VCC +12V) **2b.** Car ground (GND)
2c. Light module **2d.** Car +12V

Plow connector

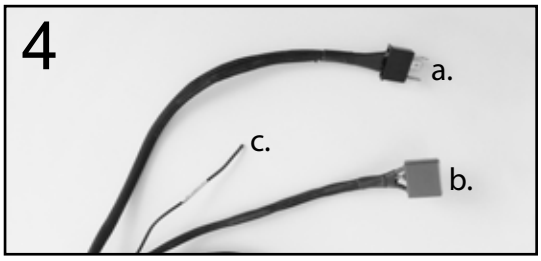

4a. Light connector (vehicle harness)
4b. Vehicle light bulb **4c.** Right turn

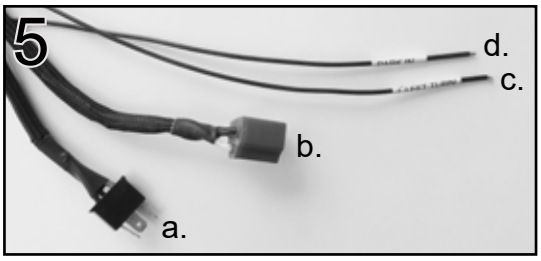

5a. Light connector (vehicle harness)
5b. Light connector (bulb)
5c. Left turn **5d.** Park

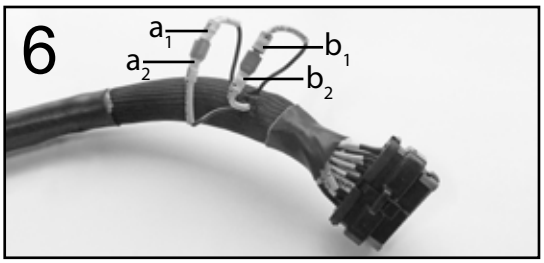

$6a_1$ = $6a_2$ = turn LEFT **$6b_1$ = $6b_2$** = turn RIGHT
Switch these cables if the turn lights are flashing on the opposite/wrong side

Plow harness placement

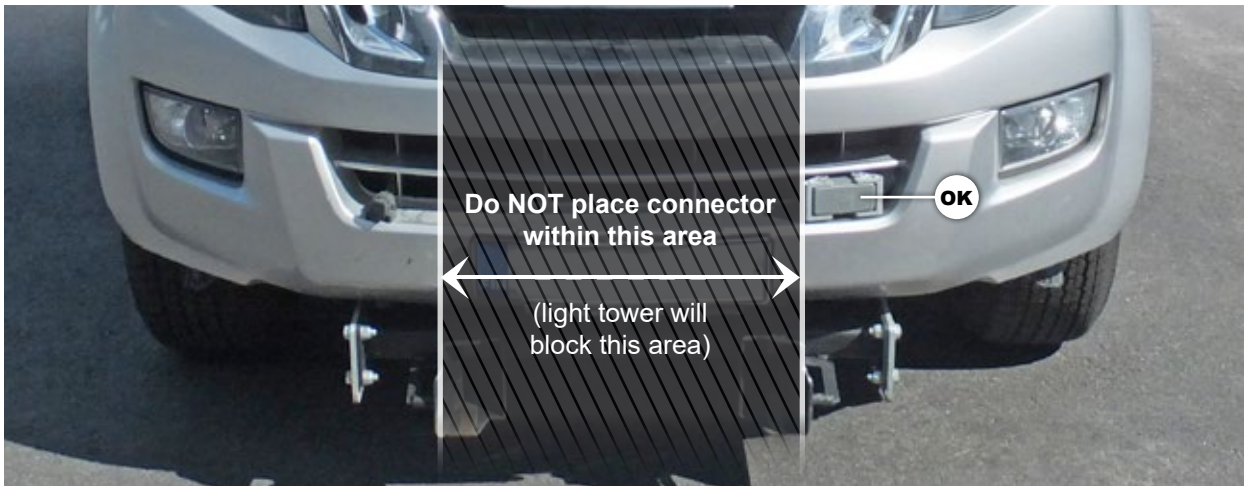

1. Fasten the connector to the bracket with four bolts.

2. Fasten the connector-assembly far into the bumper to make it less visible

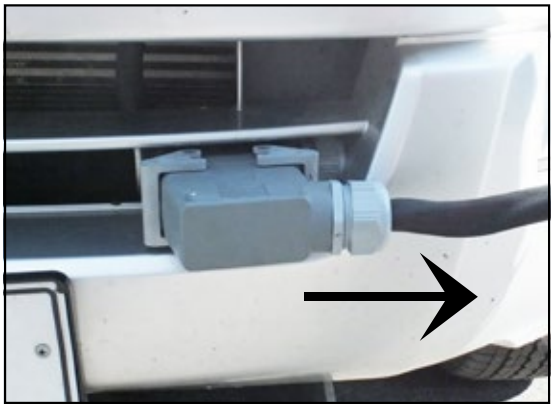

3. Harness should point outwards

Push beam installation height

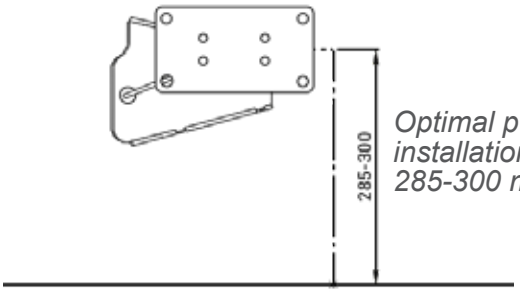

Optimal push beam installation height is 285-300 mm.

High installation: 325-340 mm
Normal installation: 285-300 mm
Low installation: 225-260 mm

A-frame alignment

NOTE
A-frame should be horizontally aligned when plow is attached to vehicle and lowered to the ground.

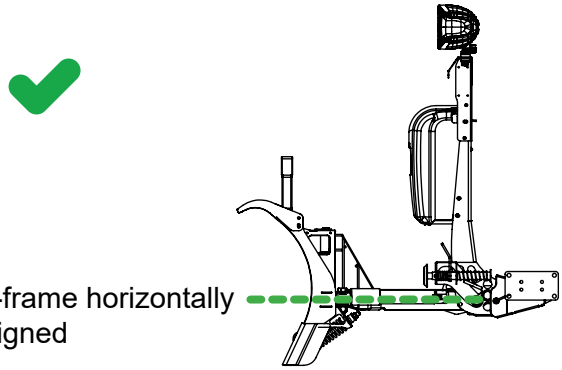

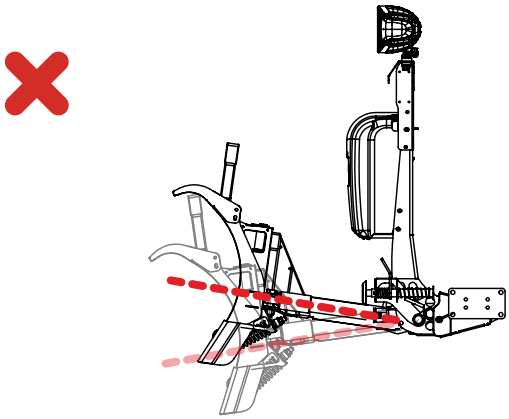

Ensure that the A-frame is horizontal, with the plow resting evenly on the road surface when attached to the vehicle.

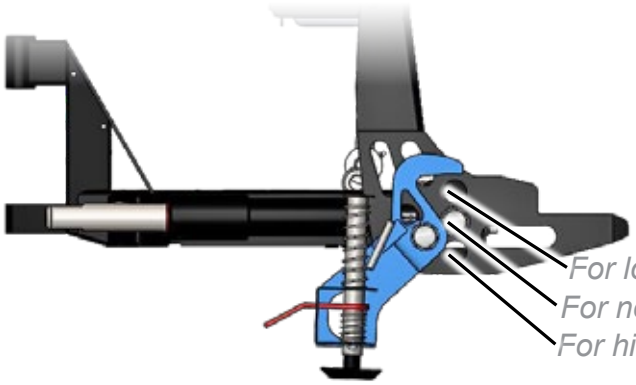

Motor valve

Straight blade

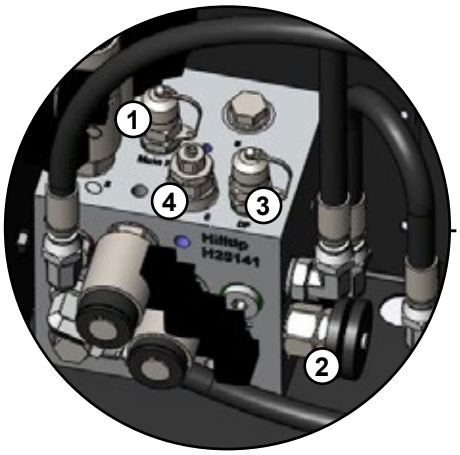

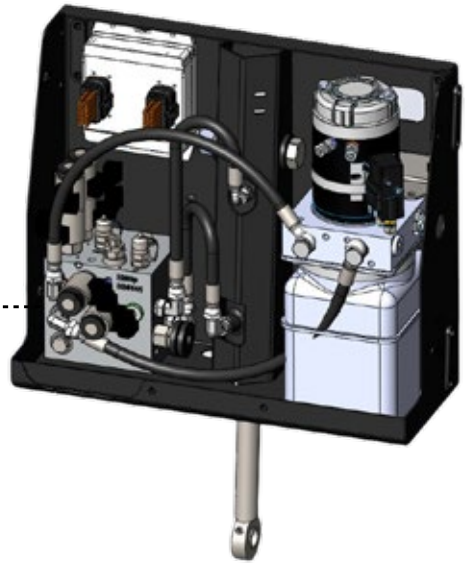

1. Main pressure
2. Adjust drop speed
3. Down pressure gauge port
4. Down pressure adjustment

V-plow

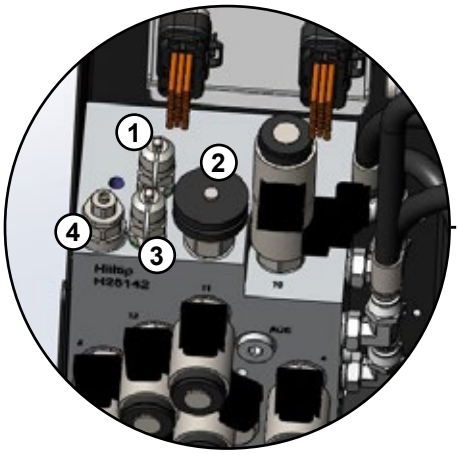

Quick hitch instructions

1 Plow must be standing steady on the ground, with plow shoes lowered

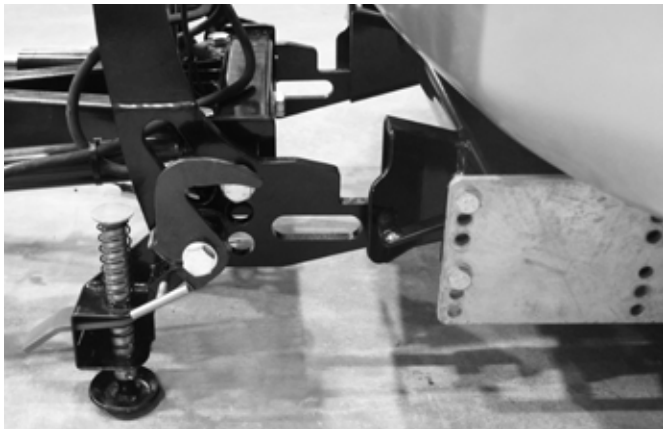

2 Align car and snowplow, slowly drive car forward

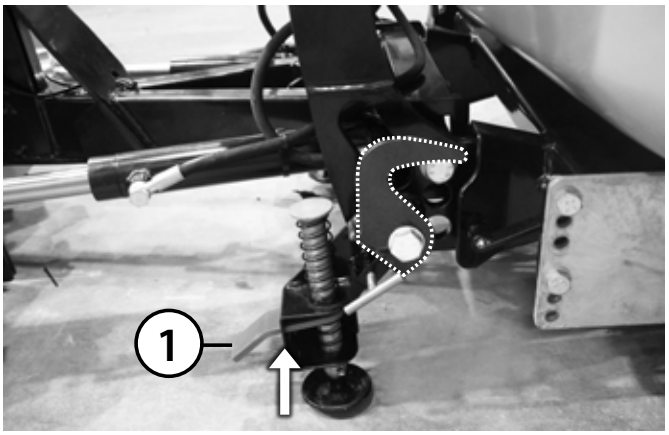

3 Fit the plow horns in receiver push beam, pull handle (1) up, the shoe will lift off the ground

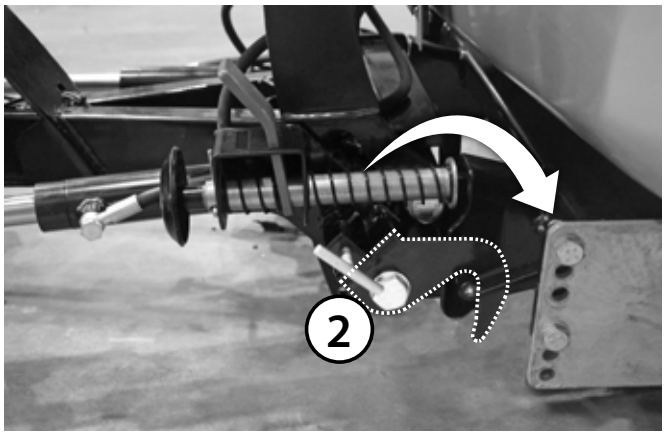

4 Pull and hold the lock pin out (2), rotate handle up and release lock pin

Joystick

Straight-blade

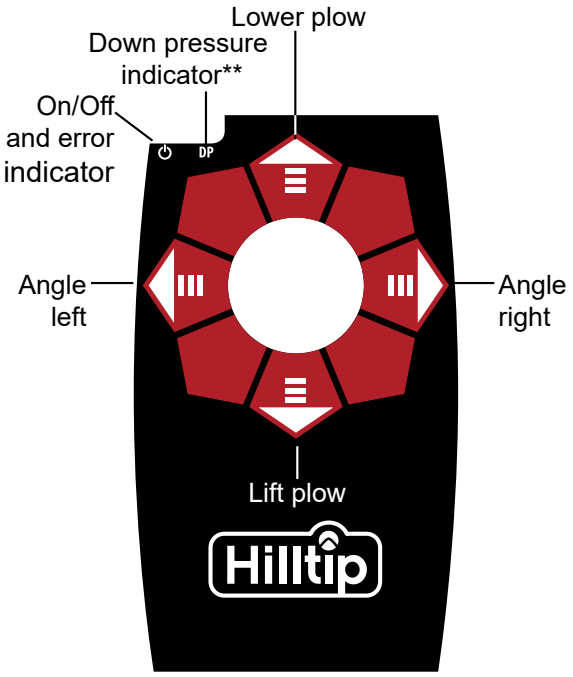

V-plow (non-current production model)

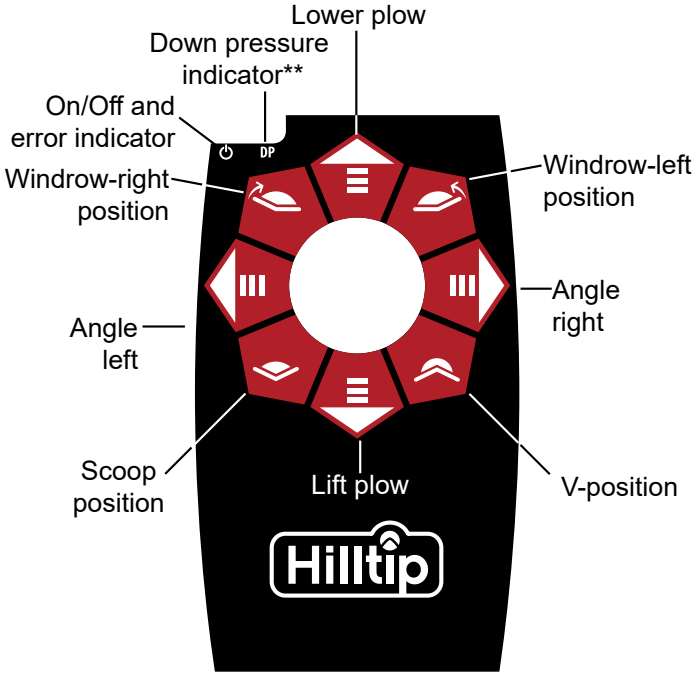

V-plow (current production model)

*** Function when the blue button is pressed**

**** Down pressure function**

Push the joystick knob upwards (lower plow-position) for more than 3 seconds to apply down pressure. This function presses the snowplow down to the ground to give you a cleaner scrape when plowing.

The downpressure-function will automatically be deacitvated 30 seconds after it has been applied.

Automatic shut-down

The joystick/IO module and snowplow will automatically shut down after being inactive for 5 minutes. To reactivate, move joystick knob or turn it off and on again.

Change software version in joystick to match your plow

This function is only available for joysticks starting with serial number "xxxx.xxxx.0008.xxxx", "...0009..." or "...0010..."

With the latest joystick version (joystick V2.0 - H25377 or H25271, software version 8, 9 or 10) it is possible to select one of the four plow versions:
• V-plow old version (see image 1)
• V-plow new version (see image 2)
• Straight-blade
• V-plow with individual wing positioning

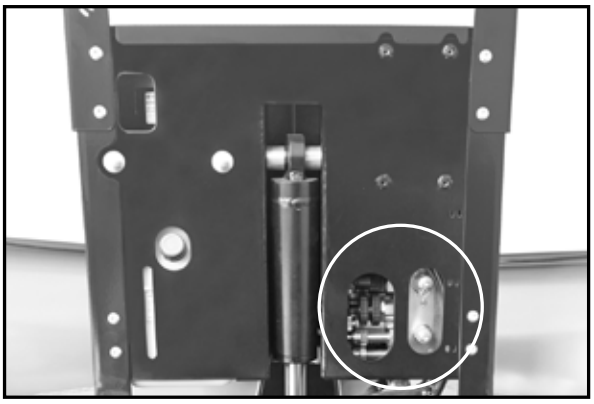

Image 1: Old version, pressure adjustment port at the back of the power unit.

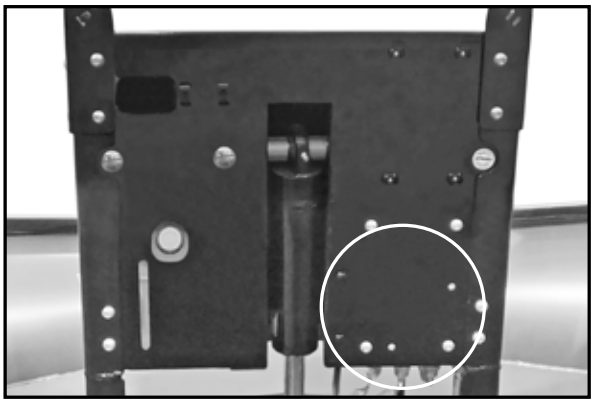

Image 2: New version, no pressure adjustment port at the back of the power unit

Change software mode in joystick

It is possible to switch between different operation mode. To change mode:

1. Switch off joystick.
2. Hold joystick knob in one of following directions and switch joystick **on** at the same time:

Joystick position	Software option	Comments
RIGHT	V-plow produced from 2017 with valve block H25142	
LEFT	Straight plow	
FORWARD	V-plow produced before 2017 with valve block H23270	
FORWARD + RIGHT	V-plow, move wings independently	Supported in version 10
BACKWARDS + BUTTON	V-plow, Hilltip button logic	Supported in version 18
RIGHT + BUTTON	V-plow, independent wing with button	Supported in version 23

3. Hold for approx. 6 seconds, until the orange DP led lights up.
   NOTE! To select the "Hydraulic accumulator" function, you must hold the joystick for another 3 seconds after the DP light starts to light up until the DP light starts flashing rapidly. The hydraulic accumulator function is available in version 18 and onwards.
4. Release joystick.
5. Now joystick is programmed and ready to use.

Error codes

The on/off and error indicator LED located in the upper left corner of the joystick will show a green light when turned on and if no errors are detected. If a problem is detected, the LED will flash with a red light a number of times, pause, and then repeat.

Straight-blade error codes:

Type/number of flashes	Problem
Green light	No errors detected
Constant red light	Communication problem between IO box and joystick
1 flash	Valve #1a or #1b not connected, or broken cable/coil
2 flashes	Valve #2a or #2b not connected, or broken cable/coil
3 flashes	Valve #3 or #4 not connected, or broken cable/coil

V-plow error codes:

Type/number of flashes	Problem
Green light	No errors detected
Constant red light	Communication problem between IO box and joystick
1 flash	Valve #10a or #10b not connected, or broken cable/coil
2 flashes	Valve #2 or #3 not connected, or broken cable/coil
3 flashes	Valve #4 or #5 not connected, or broken cable/coil
4 flashes	Valve #6 or #1 not connected, or broken cable/coil
5 flashes	Valve #7 or #8 not connected, or broken cable/coil
6 flashes	Valve #9 or Motor relay not connected, or broken cable/coil
	No error detection on valve 11 and 12

Maintenance

Follow this checklist to keep your snowplow in good condition and to be able to maintain full warranty for possible damages.

Periodical maintenance checklist	Yearly maintenance checklist
Check that fasteners are tight enough.	Pressure wash and dry the plow carefully before putting it in storage.
Check for scratches and exposed metal, clean and apply touch-up paint.	
Clean and apply dielectric grease on all electrical plugs and connectors. Clean and install all dust caps before placing your plow in storage.	
Lubricate all pins, bushings and the A-frame latch.	
Inspect hydraulic components, hoses and cylinders, check for leaks and wear.	Lubricate all exposed cylinder rod ends with liquid white lithium grease to prevent corrosion.
Inspect rod ends for corrosion and pitting.	Change oil every 100th hour or annually. Empty the pump fluid reservoir, discard the old fluid properly. Clean pump filter and fill the reservoir with new hydraulic fluid to 2 cm from the top. By changing the fluid annually, the pump and manifold lifetime will be extended. Never mix different fluid types.
Check cutting edges for wear.	
Check the hydraulic fluid level. Fill with fluid to 2 cm from the top of the reservoir, do not exceed this level. Never mix different fluid types. Change oil every 100th hour or annually.	
Remove snow and ice build-up from the pump and A-frame.	Cover the snowplow with a tarp during storage, to protect it from sun fading and other weather conditions and circumstances.

For the snowplow hydraulic system we recommend using: **ISO VG 15 - Teboil hydraulic Arctic oil**

Grease fittings:

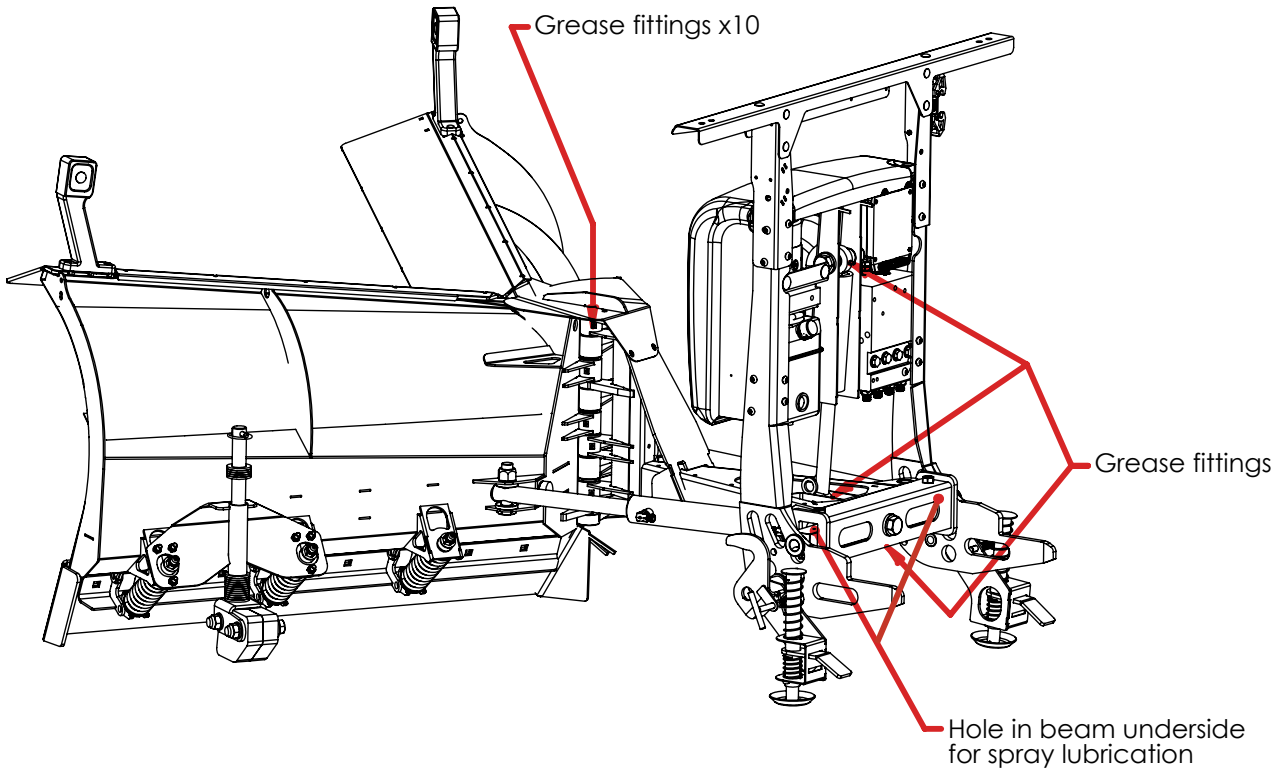

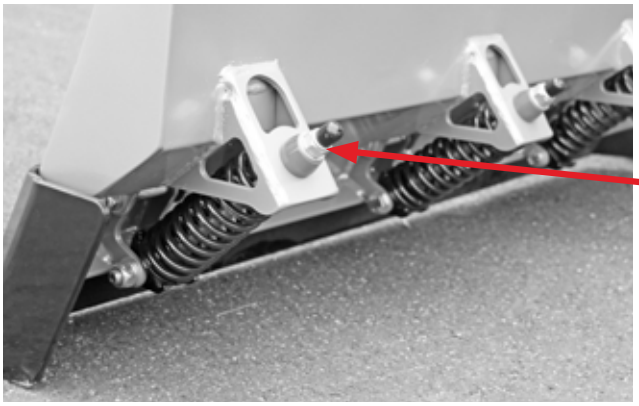

Straight-blade valve electrical functions

Blade movement	Angle right	Angle left	Down pressure	Raise	Lower	Idle	Float
MOTOR			*				
#1a							
#1b							
#2a							
#2b			*				
#3							
#4							

1* = Goes low after 30 sec.

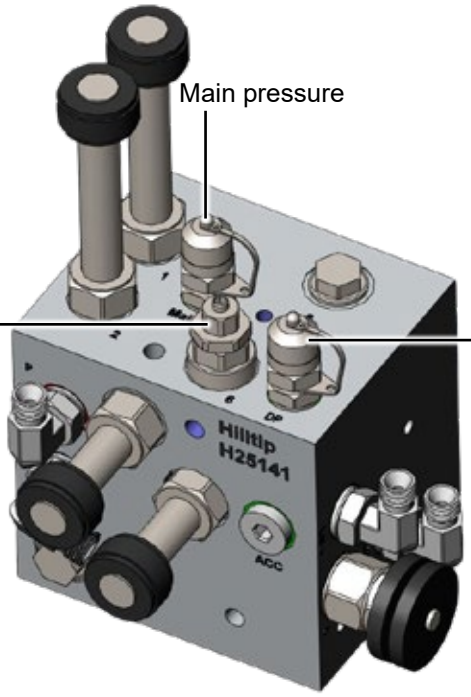

V-Plow valve electrical functions

Blade movement	Angle right	Angle left	Right extend	Left extend	Right retract	Left retract	Scoope	Vee	Down pressure	Raise	Lower	Idle	Float
MOTOR									*				
#1													
#2													
#3													
#4													
#5													
#6													
#7													
#8													
#9													
#10a													
#10b									*				
#11													
#12													

* = Goes low after 30 sec.

The table below shows how to activate the different functions depending on which mode you have chosen.

Blade movement	**Angle right**	**Angle left**	**Right extend**	**Left extend**	**Scoope**	**Vee**	**Right retract**	**Left Retract**	**Down pressure**	**Raise**	**Lower / Float**	**Idle**
V-plow with push button												
Button	Not pressed	Not pressed	Pressed	Pressed	Pressed	Pressed			Don't care	Not pressed	Not pressed	Don't care
Joystick position	Right	Left	Right	Left	Forward	Backward			Forward	Backward	Forward	Center
V-plow												
Joystick position	Right	Left	Forward + Right	Forward + Left	Backward + Right	Backward + Left			Forward	Backward	Forward	Center
V-plow with indep. wing												
Joystick position	Right	Left	Forward + Right	Forward + Left			Backward + Right	Backward + Left	Forward	Backward	Forward	Center

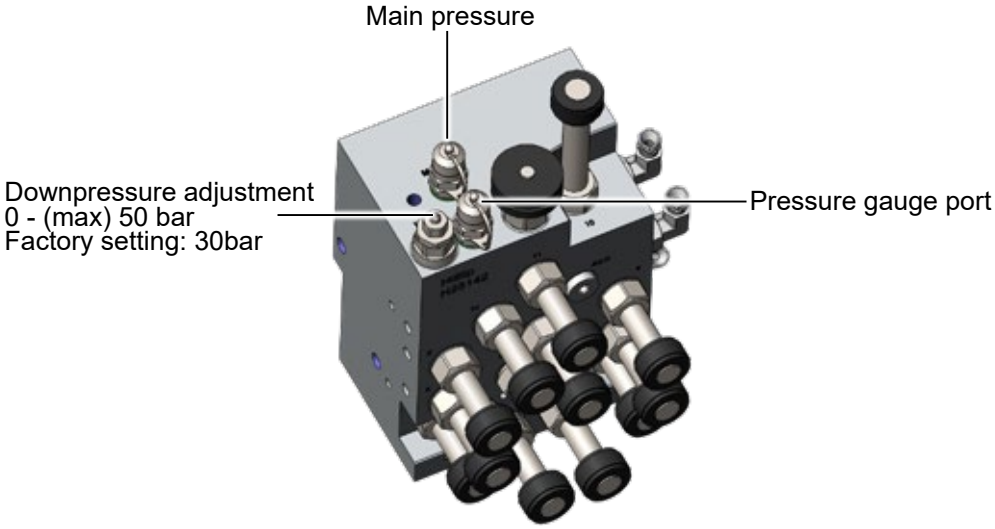

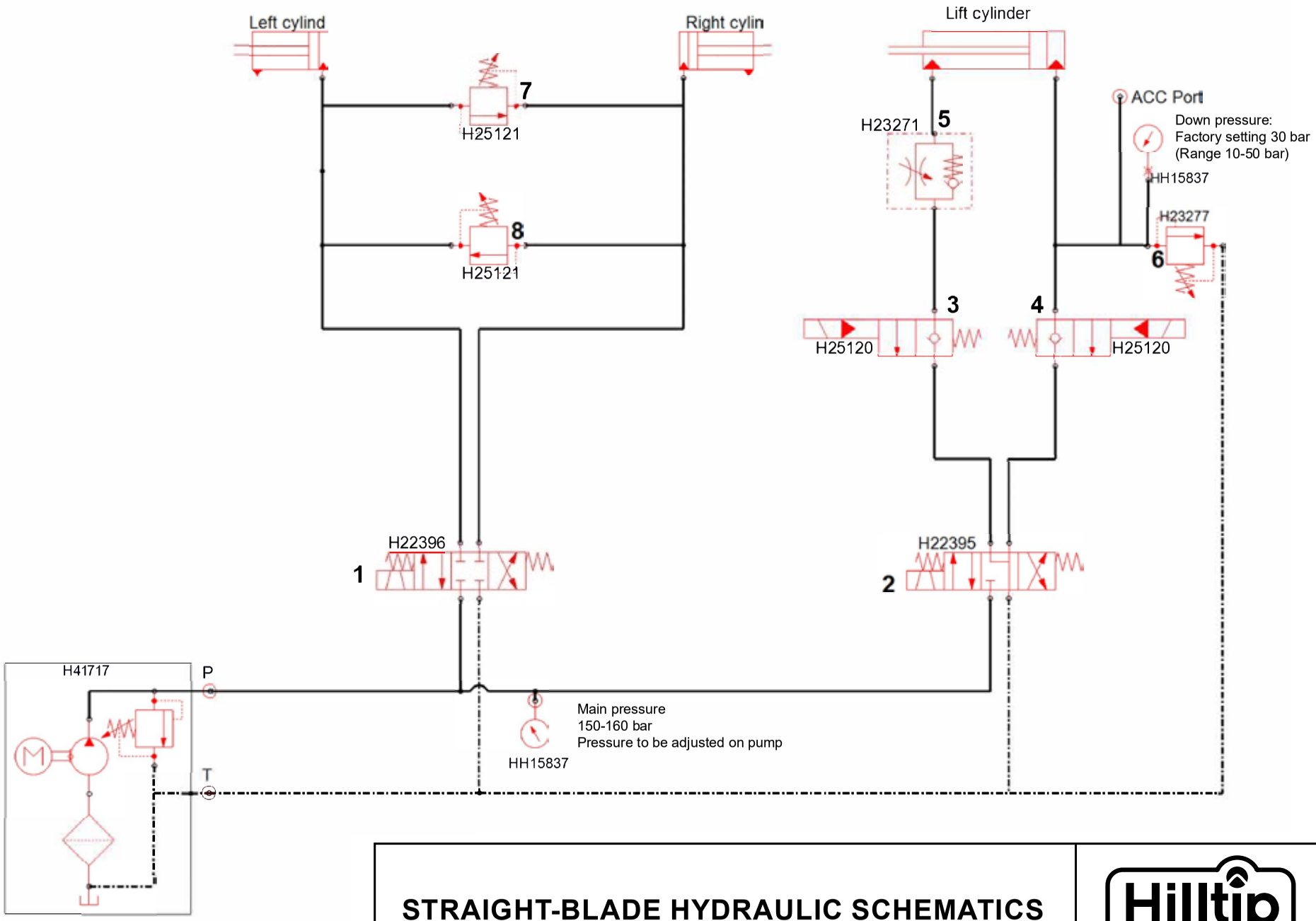

STRAIGHT-BLADE HYDRAULIC SCHEMATICS

Hilltip

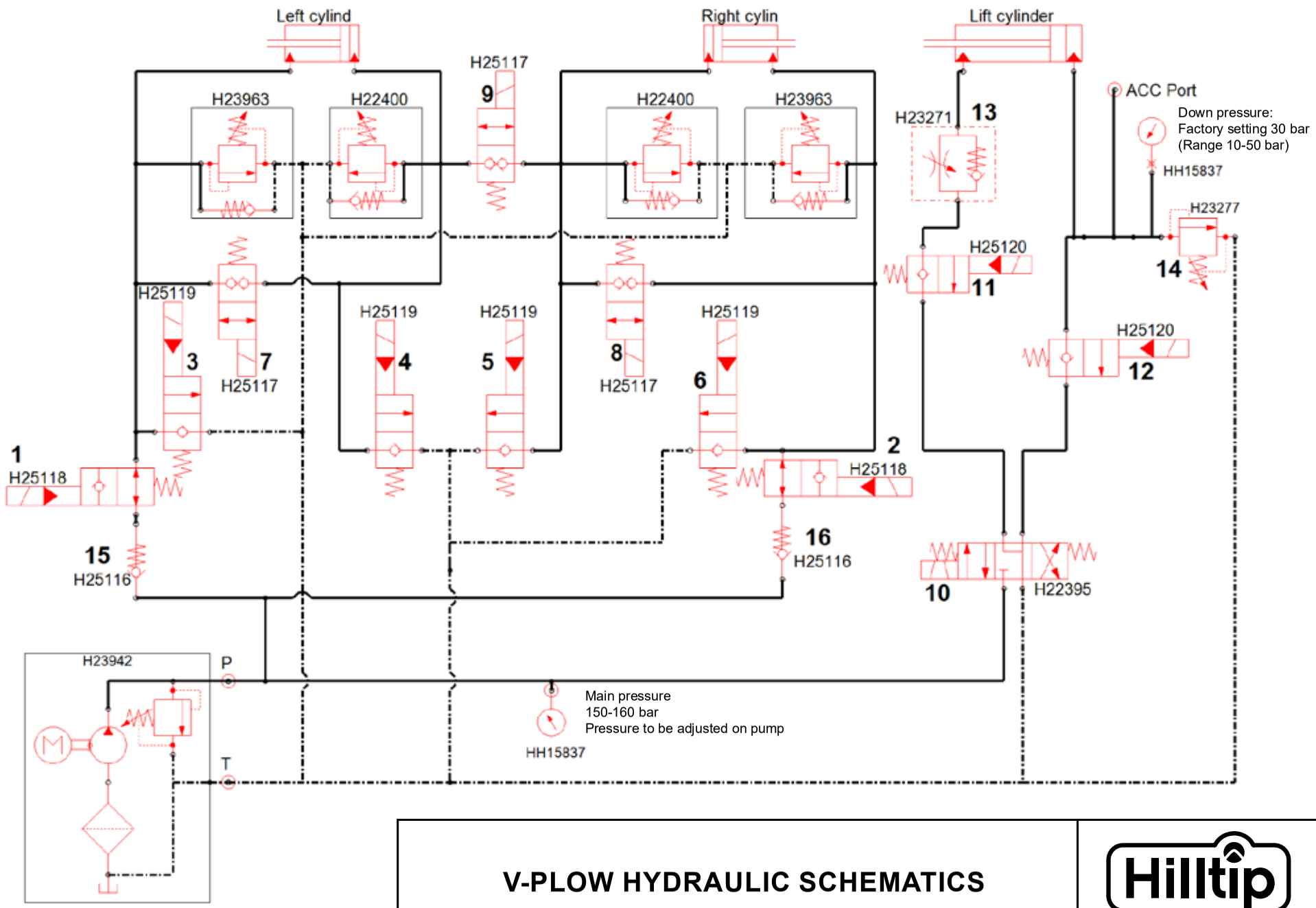

V-PLOW HYDRAULIC SCHEMATICS

Hilltip

Straight blade - Plow side electrical schematics

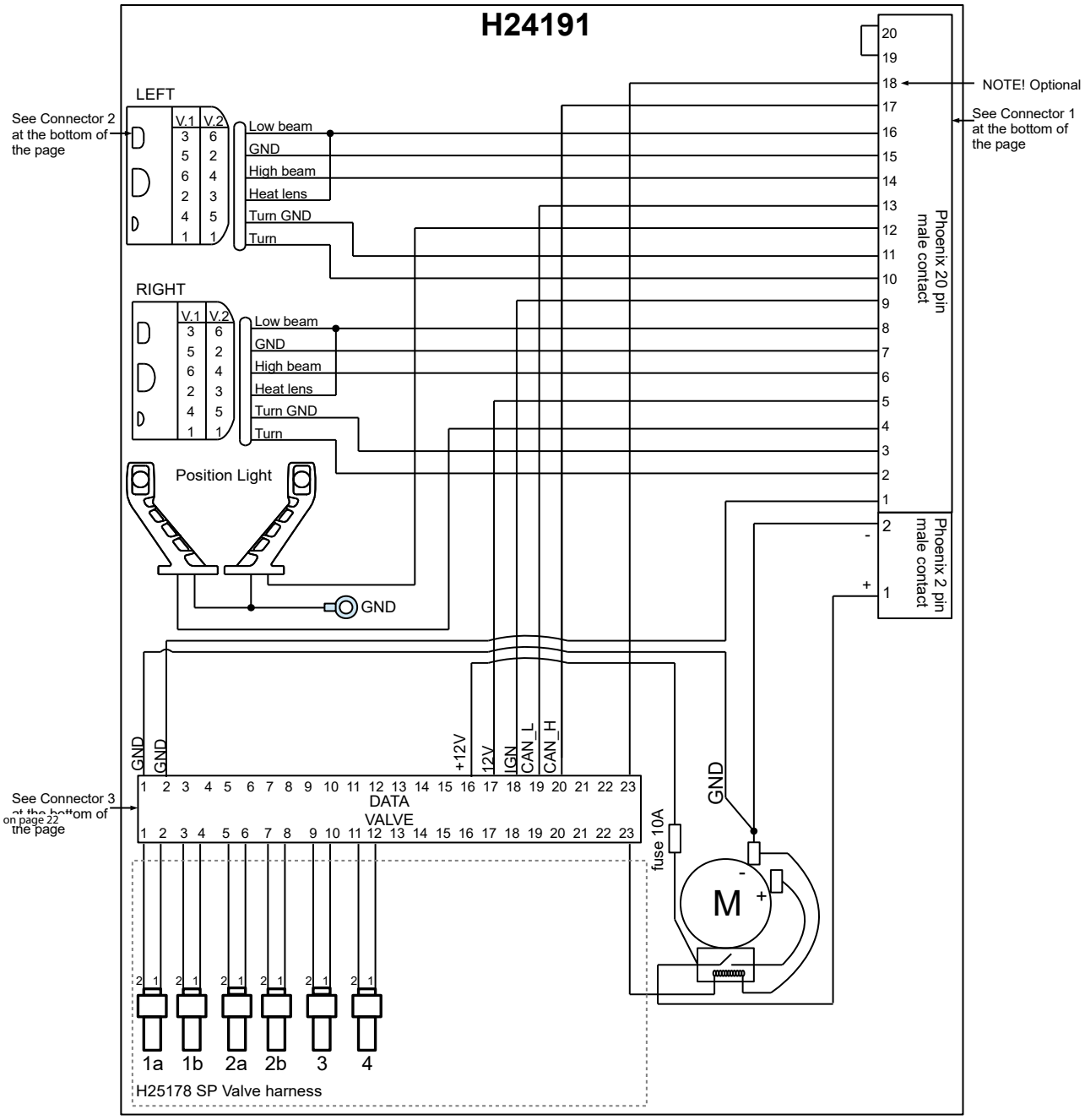

Connector 1:
Phoenix 20-pin plow side connector

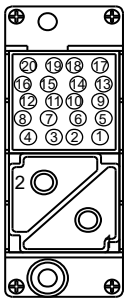

Connector 2:
Plow light connector

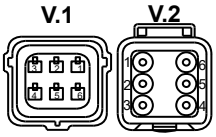

V.1	V.2	
1	1	Turn
5	2	GND
2	3	Heat lens
6	4	High beam
4	5	GND (turn)
3	6	Low beam

Connector 3:
23-pin connector

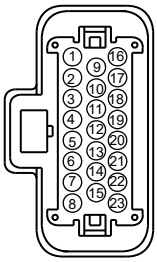

V-plow - Plow side electrical schematics

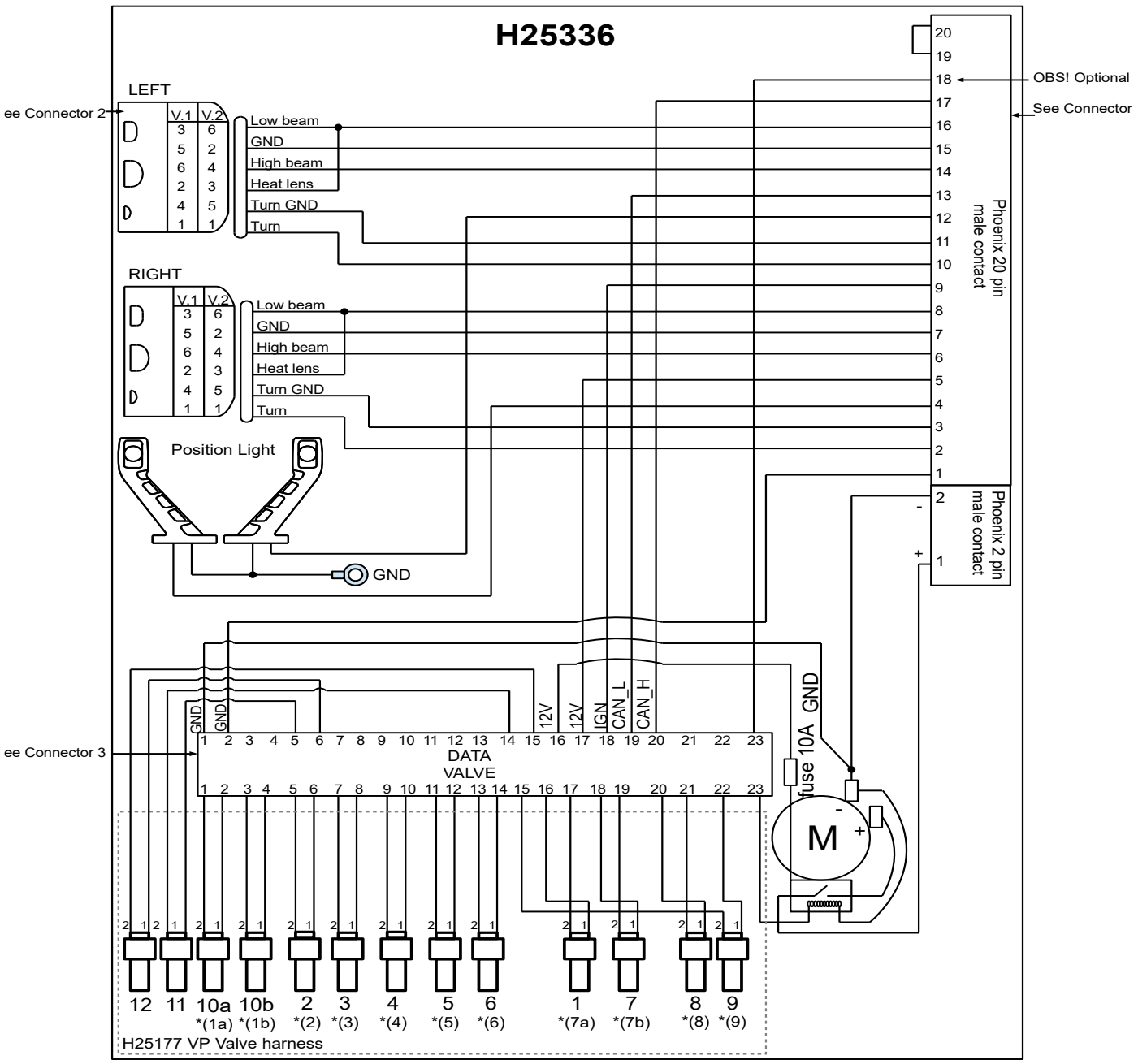

Connector 1:
Phoenix 20-pin plow side connector

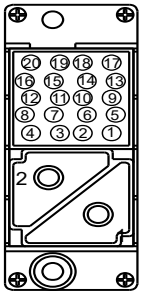

Connector 2:
Plow light connector

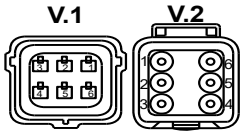

V.1	V.2	
1	1	Turn
5	2	GND
2	3	Heat lens
6	4	High beam
4	5	GND (turn)
3	6	Low beam

Connector 3:
23-pin connector

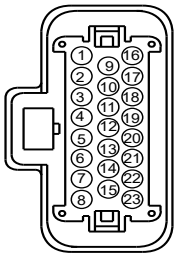

***** Plows produced before 2017. Numbering on valve block V1 (H23270).

Vehicle side electrical schematics

H24230 / H30591
(H4) (deutsch)

Deutsch male (right)
Deutsch female (right)
Right Turn
Connect to vehicle wire
HIGH BEAM (C)
LOW BEAM (B)
GND (A)
GND (A)
LOW (B)
HIGH (C)
+12VDC
fuse 7.5A

Lamp Module NSR-IA, IR-IA....

1 Vin Turn & Pos (IR:Left low & high)
2
3
4 Left turn in
5 Right turn in
6 Vin (IR: Turn & Pos)
7 Position light
8 Left Turn out
9 Right turn out
10 Common left
11 GND
12 Common right
13 (IR: Right low & high)
14 Common left
15 GND
16 Common right
17 GND
18 Common right
19 Position light
20 GND
21 GND
22 Common left
23 Plow low beam right
24 Low beam right (IR: activation of plow lights)
25 High beam right (IR: activation of plow lights)
26 High beam left (NSR: activation of plow lights)
27 Plow attribute switch
28 Low beam left (NSR: activation of plow lights)
29 Vehicle high beam right
30 Vehicle low beam left
31 Vehicle high beam left
32 Plow high beam right
33 Plow low beam left
34 Plow high beam left
35 Vehicle low beam right

See Connector 1
Phoenix 20 pin female contact
Phx 2 pin female con
+12VDC brown
CAN_L white
CAN_H blue
GND black
IGN yellow-green
See Connector 2
See Connector 3
See Connector 4
FUSE 125A
Battery
Hilltip
Left Turn
Connect to vehicle wire
Deutsch male (left)
Deutsch female (left)

Connector 1:
Phoenix 20-pin vehicle side connector

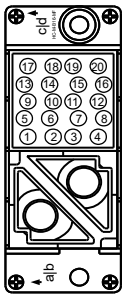

Connector 2:
Connector to joystick (male)

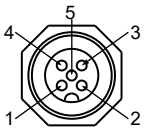

1. +12VDC
2. CAN_L
3. CAN_H
4. GND
5. Activation

Connector 3:
35-pin main connector

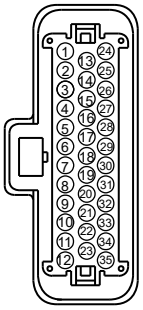

Connector 4:
H4 connector or Deutsch connector

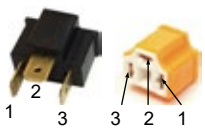

1. GND
2. Low beam
3. High beam

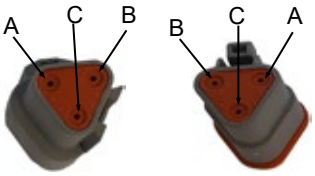

A. GND
B. Low beam
C. High beam

Straight blade UTV - Plow side electrical schematics

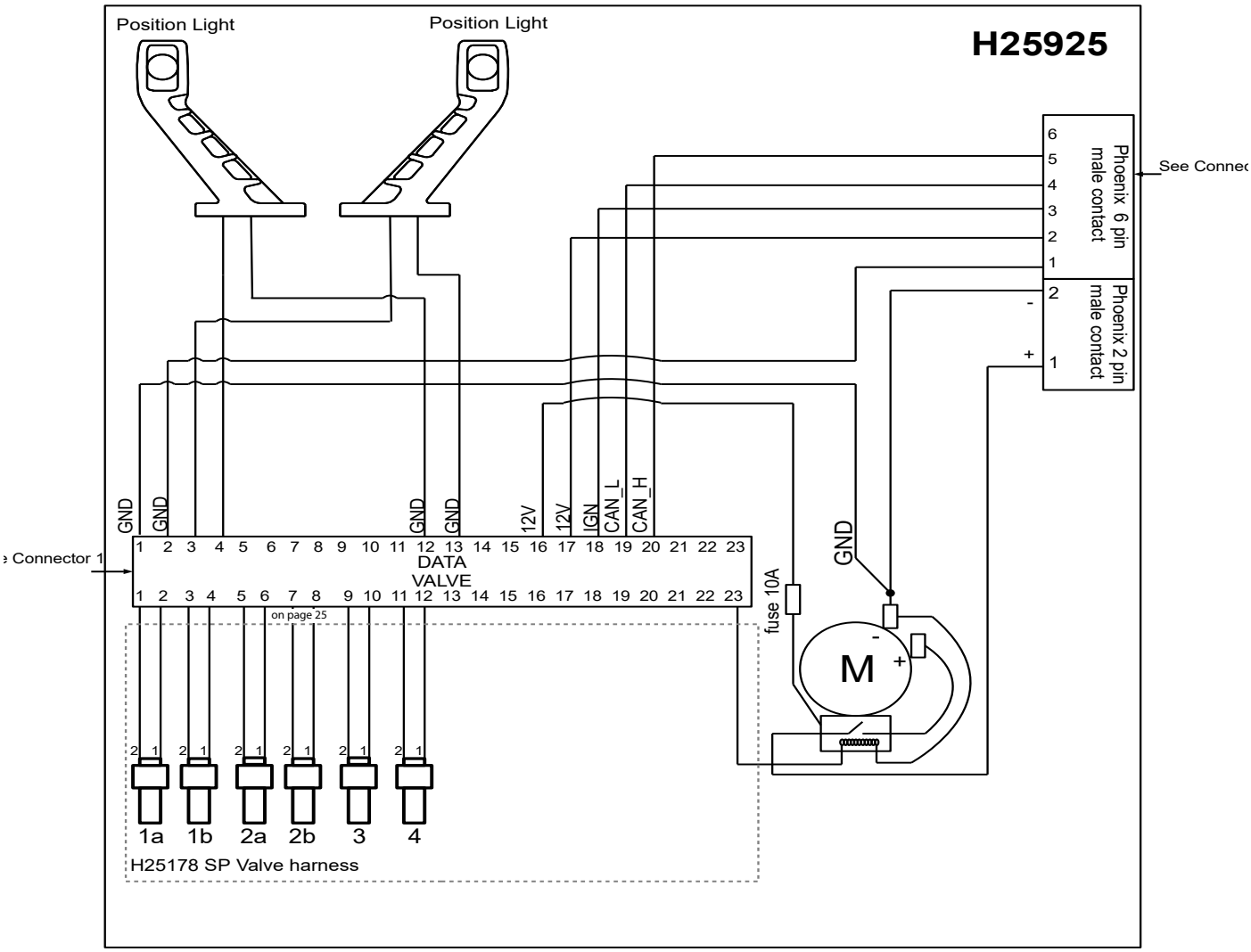

Connector 1:
23-pin connector

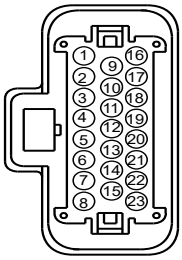

Connector 2:
Phoenix 6-pin plow side connector

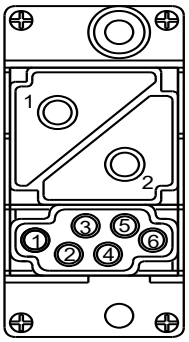

V-plow UTV - Plow side electrical schematics

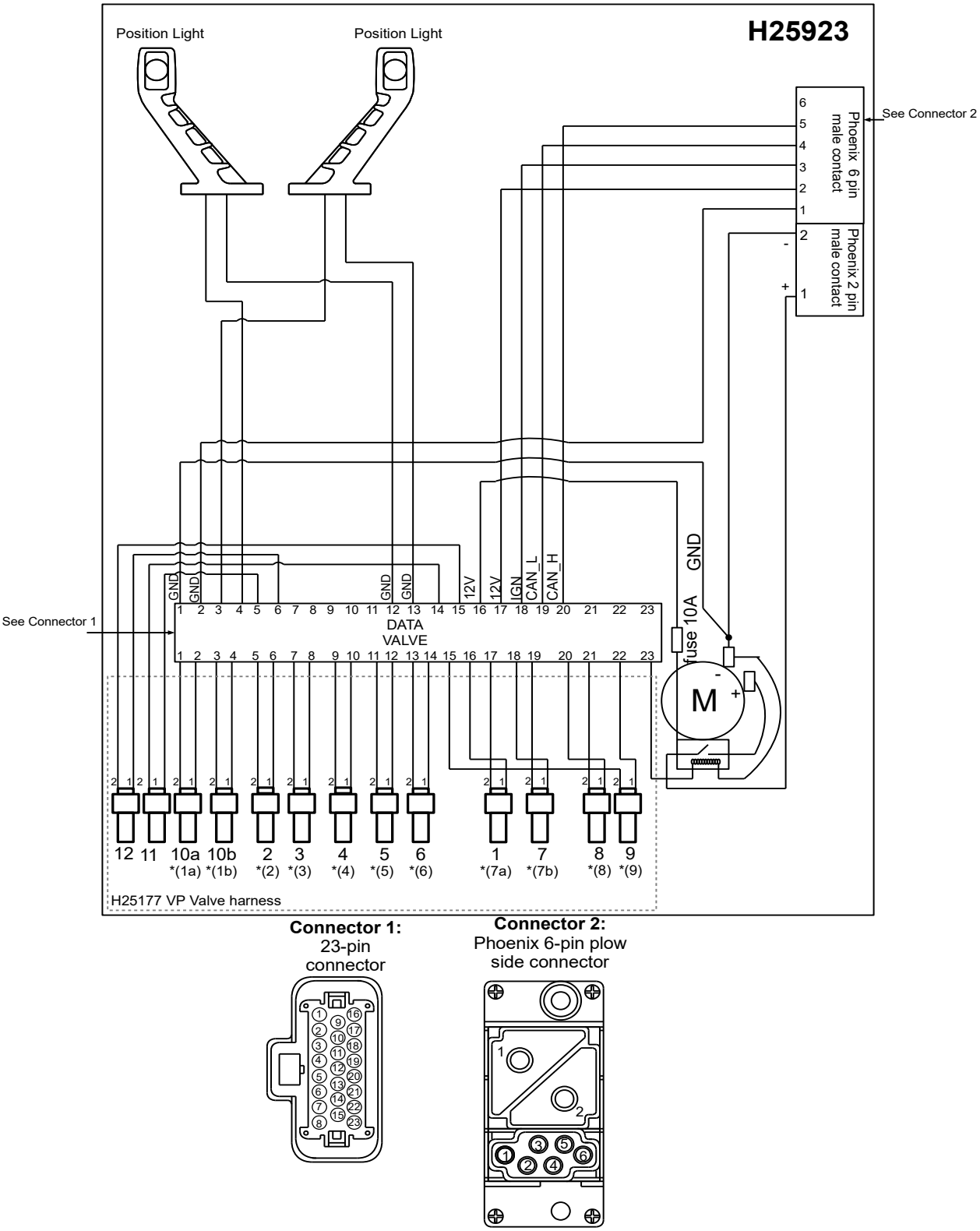

Vehicle side UTV electrical schematics

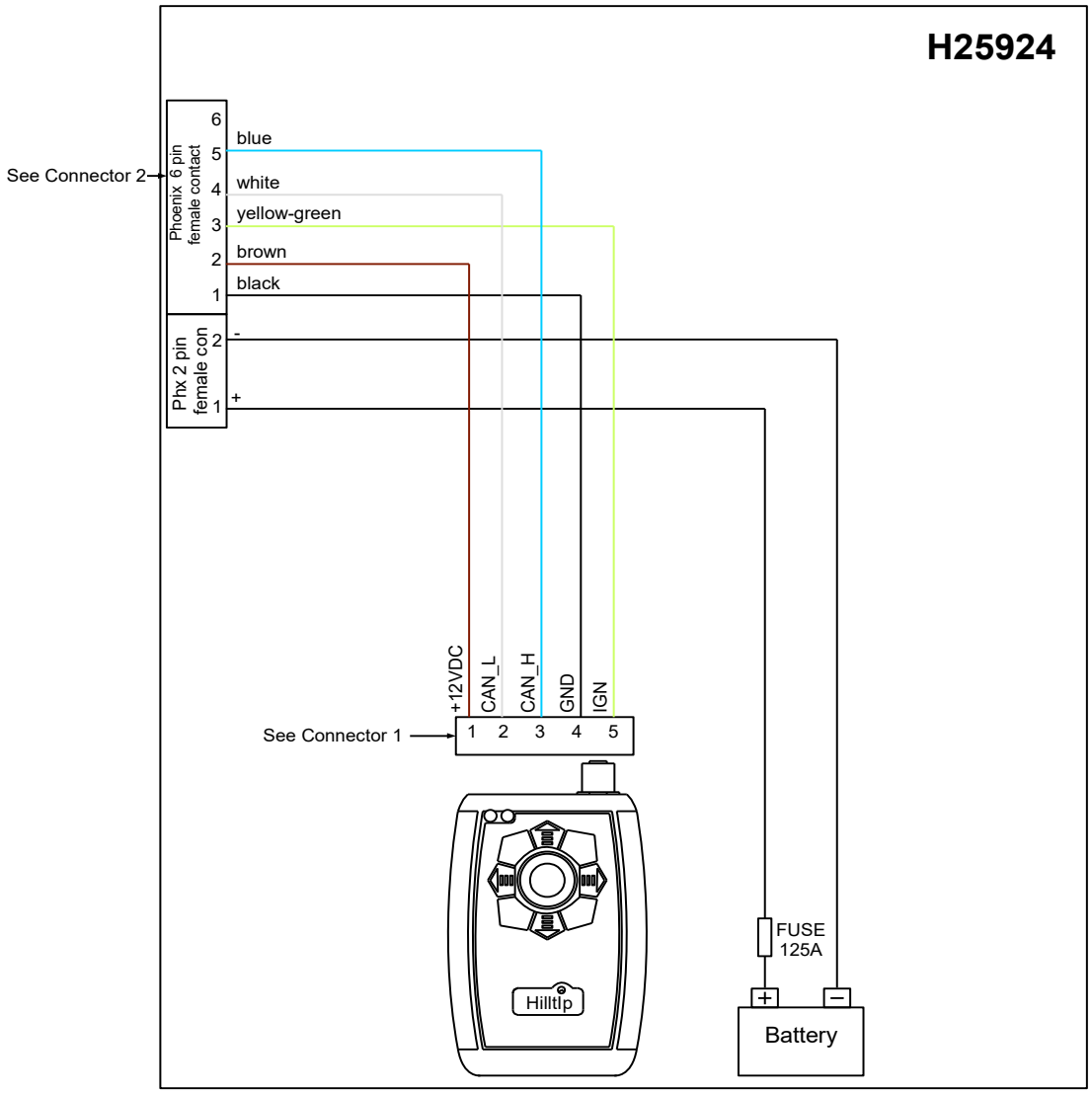

Connector 1:
Connector to joystick (male)

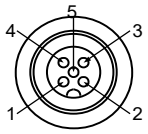

1. +12VDC
2. CAN_L
3. CAN_H
4. GND
5. Activation

Connector 2:
Phoenix 6-pin vehicle side connector

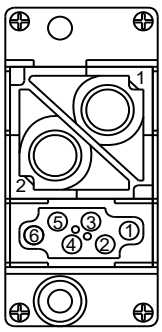

Warranty information

This warranty replaces all previous warranties

Warranty

Thank you for your interest in the products and services of Oy Hilltip Ab. This Limited Warranty applies to snowplows, spreaders, sweepers and other products and parts (from now on referred to as the ”Product”) purchased from Hilltip or an authorized dealer.

What does this limited warranty cover?

This Limited Warranty covers any defects in material or workmanship under normal use during the Warranty Period.

During the Warranty Period, Hilltip, or an authorized dealer will repair or replace, at no charge, products or parts of a product that proves defective because of improper material or workmanship, under normal use and maintenance.

How long does the coverage last?

The Warranty Period for the product purchased from Hilltip, or an authorized dealer is two (2) years from the date of purchase. The warranty period for a replacement part is one (1) year from the date of replacement or repair.

How to obtain warranty on your product?

Make sure your dealer has registered your product. In order to obtain service under this warranty the product must be registered with the end user’s contact details (name, address, e-mail address and phone number).

What does this limited warranty not cover?

- Improperly installed parts.
- Damage caused by usage that is not in accordance with product instructions.
- Modification of the product, and/or the vehicle, is entirely at the purchaser’s risk.
- This warranty does not include compensation for the drive to the service spot.
- Any damage in transit will be the responsibility of the carrier or at the risk of the purchaser.
- Hilltip will not provide replacement equipment or cover rental costs while your equipment is out of service.

This Limited Warranty does not cover any problem that is caused by:

- Misuse, neglect, accident, improper installation, maintenance or storage, or repair or alternation by anyone except Hilltip or an authorized dealer.

What do you have to do?

To obtain warranty service, you must first contact us or your authorized dealer. The purchaser must notify Hilltip or an authorized dealer within ten (10) days after any defect in the product becomes known during the warranty period.

What will we do to correct problems?

Hilltip, or an authorized dealer will repair or replace the part at no charge using either new or refurbished replacement parts.

DECLARATION OF CONFORMITY

Manufacturer's & Assambler's Name: **Oy Hilltip Ab**
Manufacturer's & Assambler's Address: **Pukkisaarentie 6, FIN-68600 Pietarsaari, Finland**

Equipment Description: Hilltip Snowplow Applications
Equipment Model Designation: Hilltip SnowStriker 1650-SP, 1850-SP, 2100-SP, 2250-SP, 2400-SP, 2600-SP, 1650 VP, 1850-VP, 2100-VP, 2250-VP, 2400-VP, 2600-VP

Equipment applications: Pickup/Truck

The equipments specified above are manufactured, where applicable, in conformity with provisions of the normative document according to the following directives and standards, in addition to relevant Road Traffic Regulations in European countries:

- 2006/42/EC
- EN 15432-1
- 2009/433/EG

I, the undersigned, hereby declare that the equipments specified above, that have been assambled by Oy Hilltip Ab, conforms to the above directives and standards

Pietarsaari 6 March 2021

Signature: Tom Mäenpää

Printed Name: Tom Mäenpää

Title: CEO

Installer's Name:

Installer's Address:

Type:

Serial number:

Year of installation:

I, the undersigned, hereby declare that the equipment installation to the vehicle specified above conforms to the directive 2006/42/EC and relevant Road Traffic Regulations.

DATE:

Signature:

Printed:

Title:

Oy Hilltip Ab
Pukkisaarentie 6
FIN-68600 Pietarsaari
Finland

+358 50 5983 026
www.hilltip.com
info@hilltip.com

Specifications and other details are subject to change without notice.