# QJY4.0-D7
# Two post lift

## Original Operating Manual

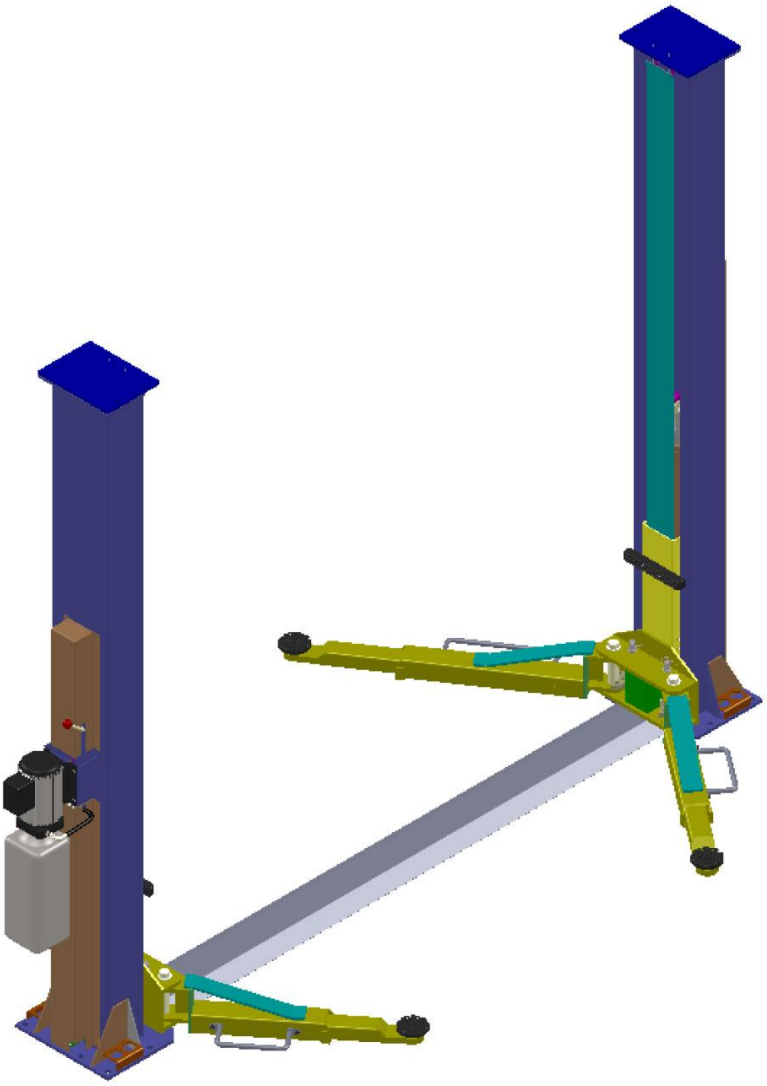

# Contents

1. Safety instruction and attentions…….3
1.1 Cautions with Words…….……...3
1.2 Safety Caution Signal……. ……3
1.3 Safety Instructions for Commissioning……..……..….4
2. Introduction on Main Parts of The Lift…….…….……4
3. Main Parameters of The Equipment……..…….…….…5
4. Installation of The Equipment……..……...…..6
5. Checking Points before Using…….…….…11
5.1 General Checking Points…….…11
5.2 Important Checking Points……..11
6. Operating Instruction…….….12
7. Equipment Maintenance and Repair……14
7.1 Day Care…..…….……..……....…...…14
7.2 Month Care……..……..…….……...…..15
8. Methods to Avoid Common Problems ……..…….…….…..…..15
9. Instruction on Structure and Principle of The Equipment…….....……..17
9.1 Main Structure of The Equipment……17
9.2 Hydraulic System……. ..17
10. Spare Parts List…….……19

# 1. Safety Instruction and Attentions

## 1.1 Cautions with Words

Pay special attention to the parts connected with product safety. Here are some examples: If there is this signal before any passage, it means that operation like this is wrong and will lead to big casualty or heavy damage to the device. The figure appearing before passage shows that it is not allowed to operate according to the passage, or the potential risk will develop into big casualty and heavy damage to the lift. The passage besides this signal lists the notice points and security requirements during the process of normally using, maintenance and care of the lift.

## 1.2 Safety Caution Signal

Please read Safety Signage carefully, understand and remember them.

Only trained person can operate and use the lift.

Never let non-trained personnel come in contact with Lift.

It's suggested by the manufacturer that the raising position should be the points of support.When install and move some big or heavy parts on ,The car during the maintenance, bracket should be used to keep the car's balance. Use the high bracket if necessary.

Supplementary bracket will reduce the heavy burden of the car on the lift when rise.

The safety warnings of the machine are placed on the column.

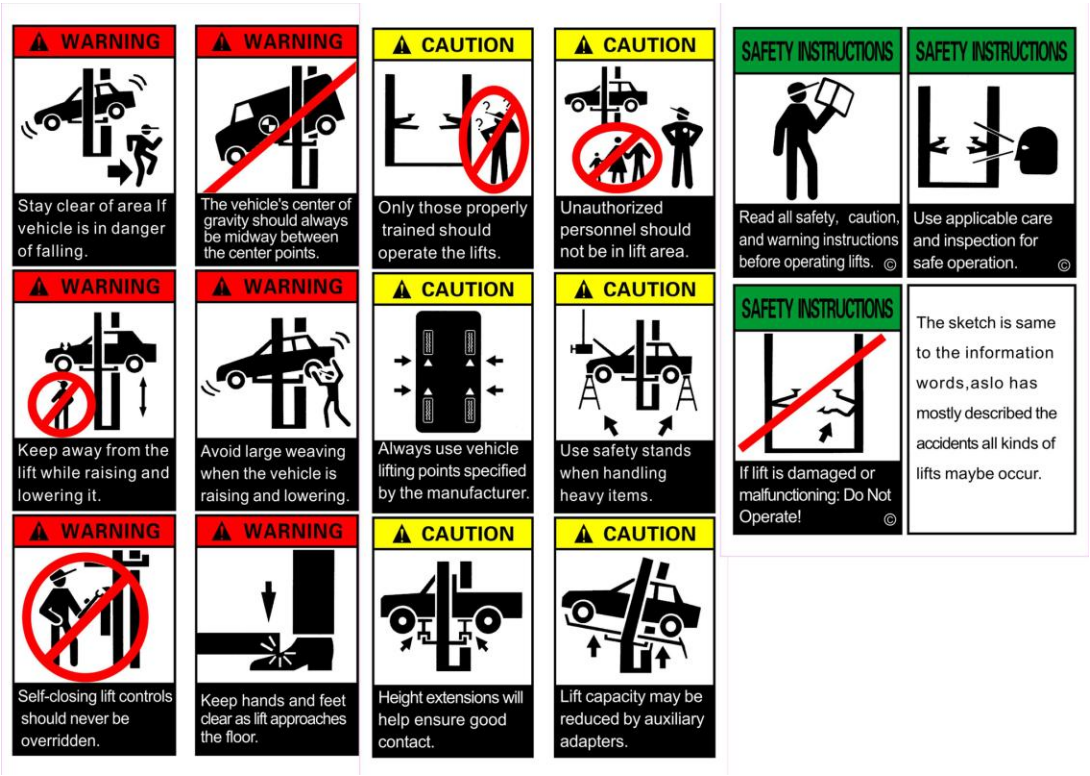

In principle, the lift is designed for both approach directions.
For a long service life, we recommend to use the short support arms for engaging the engine side of the vehicle.

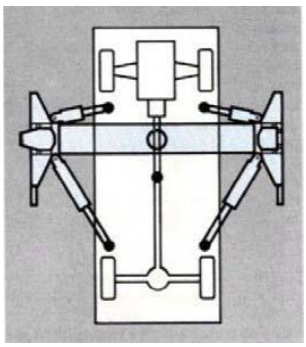

## 1.3 Storage and stacking of packages.

Packages must be stored in a covered place, out of direct sunlight and in low humidity, at a temperature between-10℃ and +40℃.

Delivery and check of packages. When the lift is delivered, check for possible damages due to transport and storage; verify that what is specified in the manufacturer's confirmation of order is included. In case of packages damage in transit, the customer must immediately inform the carrier of the problem must be opened paying attention not to cause damage to people (keep a safe distance when opening straps) and parts of the lift (be careful the objects do not drop from the package when opening)

## 1.4 Safety Notice Points

i . Operators should read the manual carefully to avoid accidents.
ii . Operators should be familiar with all functions and operating methods of the lift
iii. Check before operating and regular check must be carried out too.
iv. If there is any abnormal sound during rising and lowering, stop to use the lift.
v . Never use the lift to raise the vehicle whose weight is above 4 ton.

# 2. Main Parameters of The Equipment

| | |
|---|---|
| Model | QJY4.0-D7 |
| Total height | 2824mm |
| Lifting/Dropping time | ≈45/25s |
| The Maximum lifting Height | 1800mm |
| Minimum Height of rubber Pad | 95mm |
| Adjusting Range of Bracket Arm | R717～R1070mm<br>R900～R1380mm， |
| Width BetweenPillars | 2708mm |
| Width of the Rack | 3260mm |
| The Biggest widthfor passing the vehicle | 2428mm |
| Rated Load | 4000kg |
| Motor Power | 2.2kw |
| Working Voltage | 220V 1PH 380V 3PH |
| Noise Level | ≤75dB(A) |
| Oil Pressure | 20MPa |

New change on technical Parameter will not be informed of again.

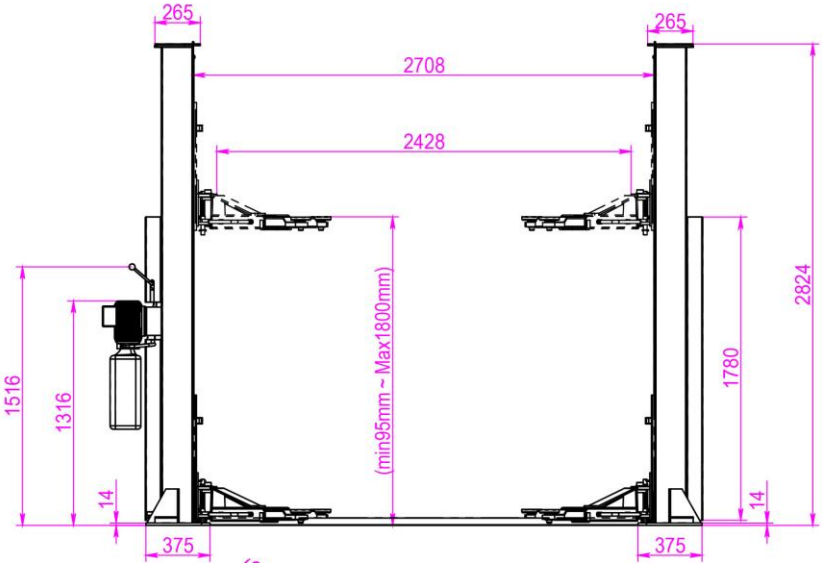


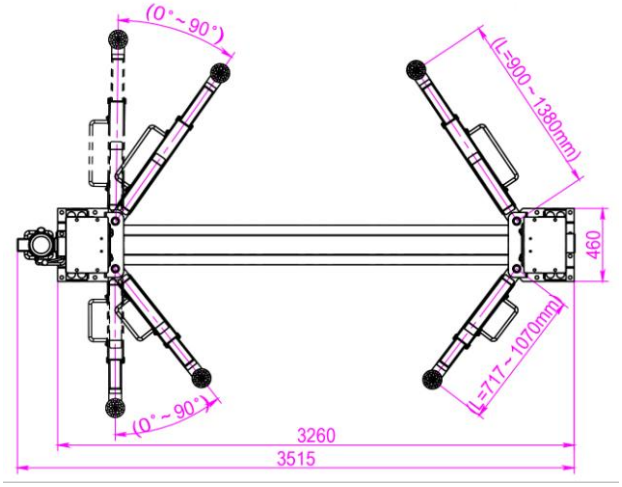


## 4. Installation of Equipment

Step1. Preparation before Installation

ⅰ. Necessary Tool: lifting equipment, churn drill, marking pen, spanner, measuring tape, sinker.

ⅱ. Installation area picture (See figure below.)

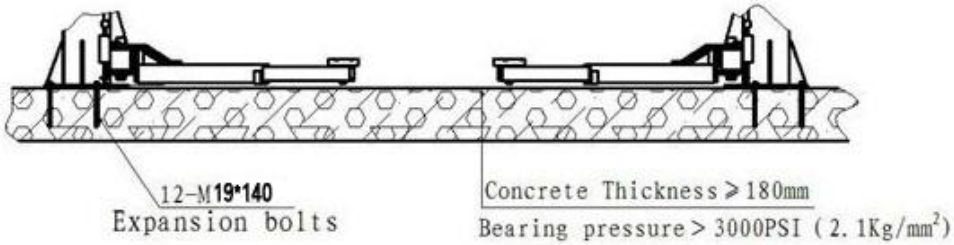


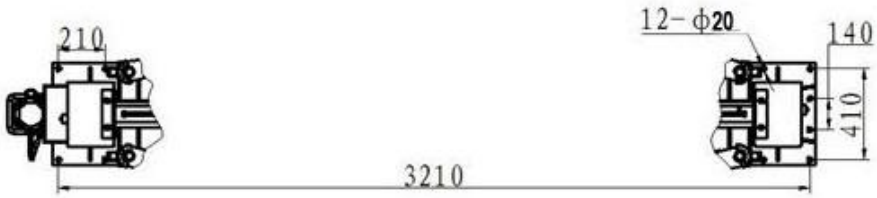

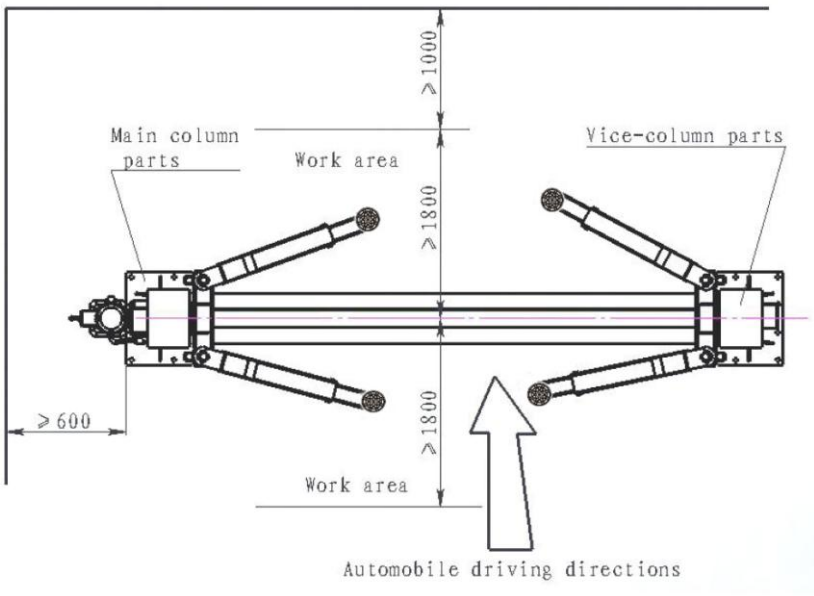


Step2.Installation of main and supplementary columns

Set up the two columns, mark with the marking pen according to the dimension of the foundation, and fix the two columns with expansion anchor bolt as the following shows. (See figure below)

Don’t install the column if the foundation is not strong enough.

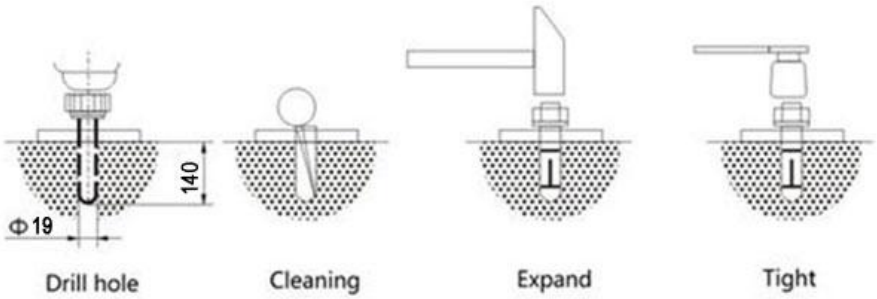


Check and make sure that angle between the column and the ground is between 90 degree and 91 degree.

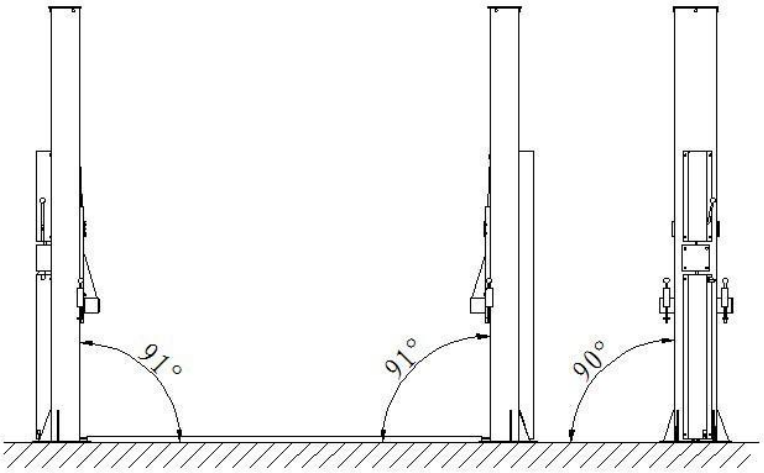


Step 3: Install the power unit onto the main column.

Step 4: Install the oil system.

Remove the drive plate, lift the carriage to the height of 600-800mm, and drop it, and make it in the safety locking condition, and make sure it won’t drop again and the two carriages are in the same height level. Connect the main and supplementary cylinders, and connect the two

cylinder with oil hoses, then use tight clips to fit the oil hose, the aim is to avoid the steel cable of mechanical locking system. See the following picture of oil connection hose.

Hydraulic system connection picture

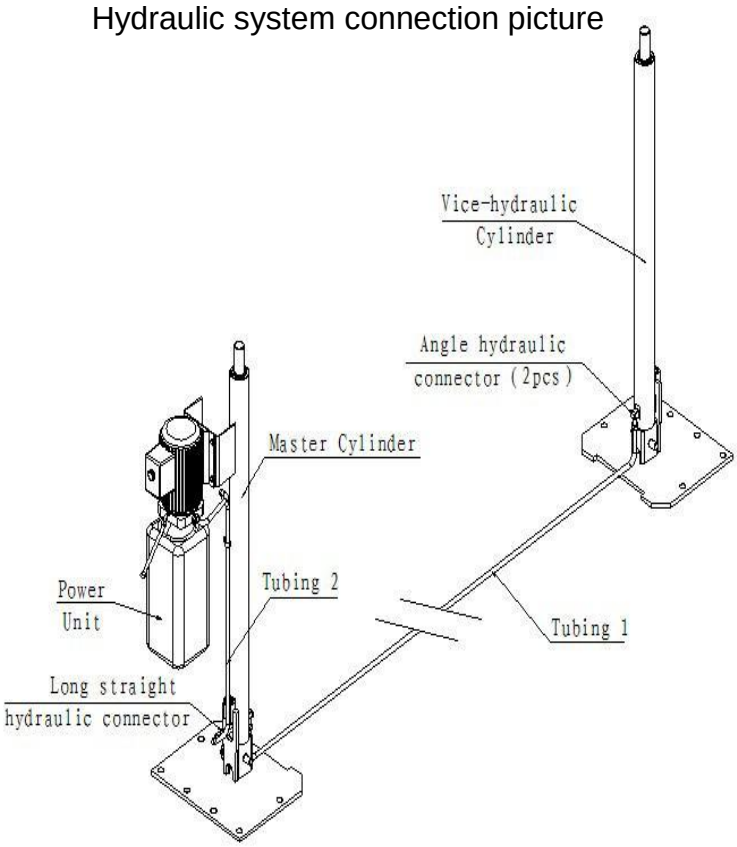


Step 5: Installation of steel cable

Install synchronical cables according to the picture

Steel cable connection picture

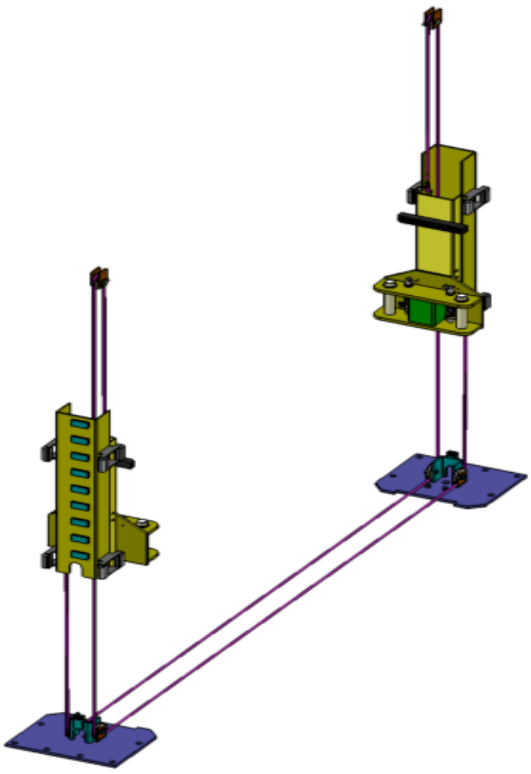

Step 6: Installation of arms

Install four arms on the two columns, swing the arms to make sure the gear and teeth match Installation arms picture.

Arms installation picture

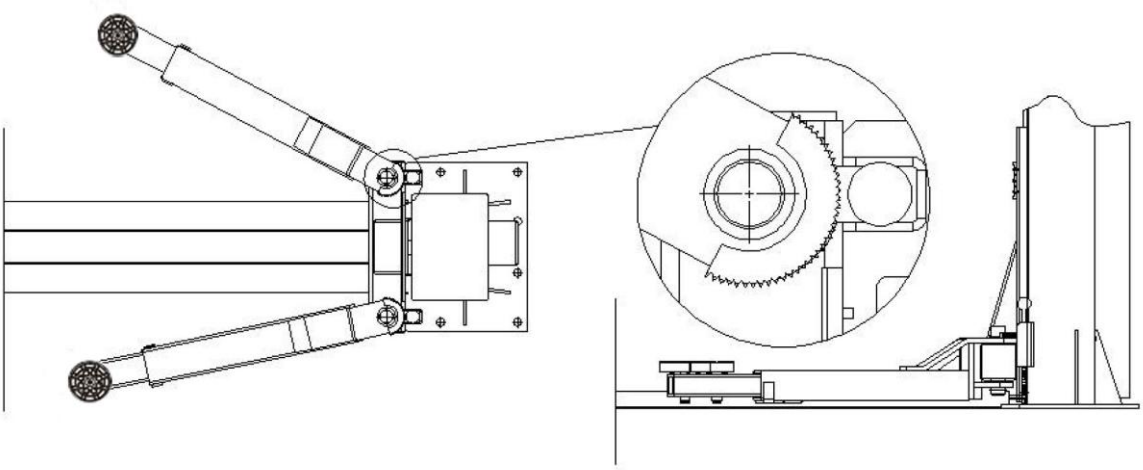

Step 7: the connection and adjustment of steel cable of mechanical locking System

Before delivery, the 7 safety socket was pre-assembled. Note: number 6&7 socket with pulley installed not in the center position as below pic 1. Install socket 1-5 and the insurance accordingly. Then install number 7 socket. Before start to install number 6 socket, make sure the hydraulic hose was installed first, the steel cable (L=5760mm) secondly. Make sure the socket 6 was installed with pulley parallel to socket 7 pulley, pic 2.

Install number 1 and 2 steel cable on main column and number 3 and 4 steel cables on the supplementary column. As steel cable number 3 is already installed from socket 6, the rest installation will be made through main column to the sheave of the operating handle and supplementary column, then pull the handle to open the two insurances on the main column. Pull steel cable number 3 to open the two insurances on supplementary column in order to make sure the four insurance operated synchronically. Fix the steel cable number 3 on the insurance handle sheave, move hands from the handle. If any insurance moves not synchronically with others, adjust the fours safety steel cables co instantaneously. Pull the handle to make the four lockes unlocking.

## Connecting picture of steel cable of mechanical locking syst

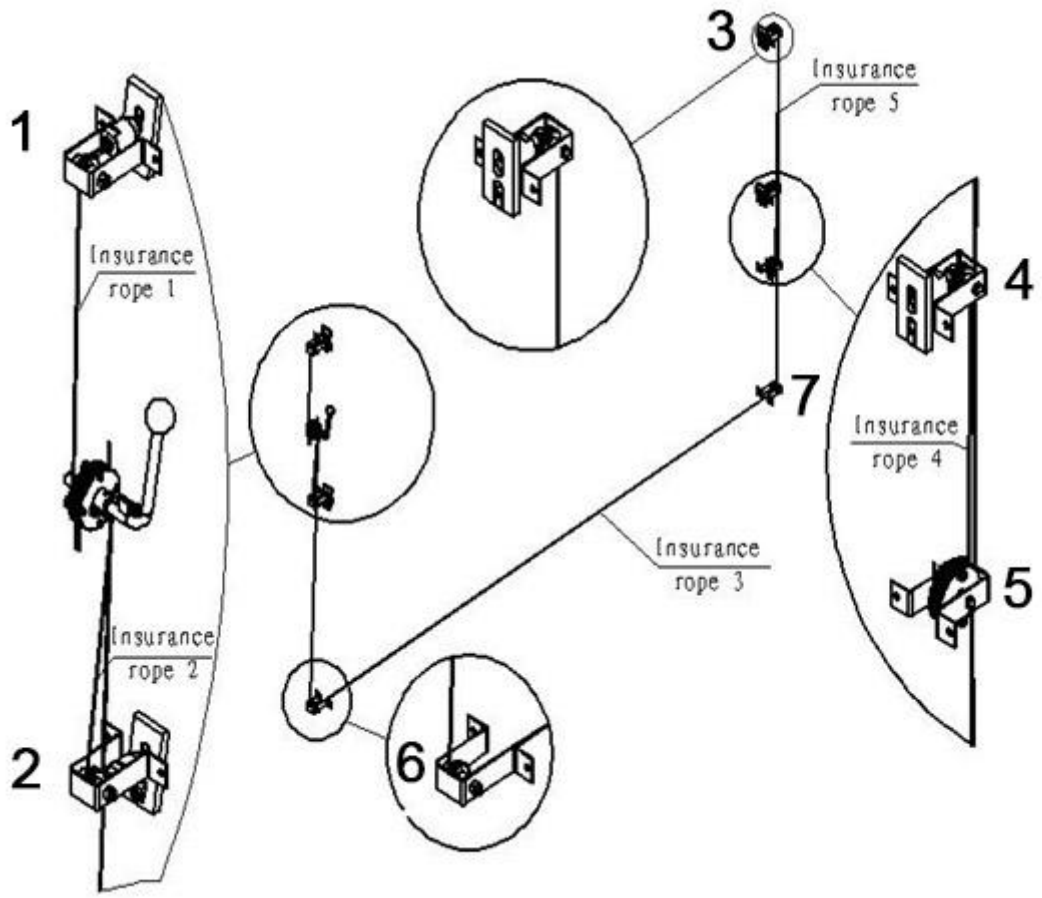


Step 8: Fill the hydraulic oil

Fill in 10 liters of N46 hydraulic oil

Step 9: Connecting the power

According to introduction stick of motor, it is requested to install main switch near the lift to make it convenient to maintain and cut the power in emergency.

All electrical system should be operated by specialized electrician.

Step 10: Put some lubricating grease on the inside rail of the two columns.

Step 11: Try the lift

1. Check the steel cable of mechanical locking system, check weather the lift is in locking state when the carriage is rising; When drop, pull the handle to make the locking in the unlocking state, and check wether the four locks are unlocked. If not, adjust the length of correspondent chain to make the lock unlock.

2. Try the tension of the steel cable, make the two carriages move synchronically by adjusting the steel cable.

Step 12: Check wether the hydraulic system is normal.

**5. Check Points before Using**

5.1 General Checking points

| item | detail | method | How to avoid |
|---|---|---|---|
| ① | Lifting has abnormal sound | visual listen | Lubricating, cleaning replacement |
| ② | the overall appearance of the lift get damage and skew | visual | |
| ③ | Rubber pad, chain wheel, wire wheels get deformation and damage | visual | replacement |
| ④ | lifting hydraulic system has abnormal sound and oil | visual listen | |
| ⑤ | Has trash inside the column | visual | Remove, maintenance and replacement |
| ⑥ | Pull four insurance manipulation handles | visual | Take off guard, adjust steel cable and replace new one |

5.2 Important Checking Points

| No. | Contents for check | Method | Remedy |
|---|---|---|---|
| ① | Check the chain, the steel cable is normal no damage | Visual | New replacement |
| ② | Check if the connection is loose bolts parts | Visual | Re-strengthening and fixed |
| ③ | Check the sprocket, the steel cable wheel whether they are normal no rupture and so on | Operation and visual | New replacement |
| ④ | Check the chain, the steel cable wheel if their rotation are normal | Operation and visual | Oiling Lubricating、cleaning、new replacement |

| | | | |
|---|---|---|---|
| ⑤ | Check whether the arm and its telescopic are normal | visual | Repair、new replacement |
| ⑥ | Check up and down movement of two landslide is normal, comfortable and non-jitter | Operation | Foreign body cleaning、oiling cleaning |
| ⑦ | Check the action of the four insurance block if it's normal and comfortable (with automatic insert action), check the insurance steel cable if it's loose injury | Operation、visual、listen | Foreign body cleaning、oiling cleaning、adjustment or new replacement |
| ⑧ | Whether it is automatically stopped when no-load up to the highest location | Operation | Repair、new replacement |
| ⑨ | Check power unit is working properly without abnormal noise | Operation、listen | Repair、new replacement |
| ⑩ | Inspect tanks, oil hoses and connecting joints is normal no leakage | Operation、visual | Repair、new replacement |

## 6. Operation Instruction

1. Operate the up and down movement several times before placing vehicle on, and ensure the safety lock is in the correct place and the equipment is normal. Check all joints, especially the safety mechanism, to ensure that no abnormal things exist when the lift is used, such as if insurance device failure, lift should not be put into use.

2. Adjust the height of four rubber pad before lift is put into use so that all the supporting points maintained at the same high plane, while arms are extended in order to obtain more room for the convenience of vehicle to entry, open the shorter arm as far as possible to support the front (engine) direction.

3. Vehicles must be at the center of lift of the lifting range, when the vehicle get rise to 100mm from the ground, we should stop rising, and then waving cars to check whether the lift bearing is reasonable safety and lift operation is normal. If everything is normal, the lifting work could be starting.

4. In the lifting process, the operators and other personnel must stand in a safe area. When vehicles reach the required height, press the lock button to make the lift into the insurance state, then the maintenance staff could go on the following maintenance operations.

5. When maintenance staff is not working under the vehicle, the power must be cut off to prevent the accident caused by the misuse of non-operating personnel.

6 · During the dropping process of the lift, the ground below the arms should be clean, otherwise the device will be damaged.

7. Add about 10L N46 hydraulic oil into the hydraulic pump tank or No. 8 (winter), No. 11 (Summer) diesel oil. Replace the hydraulic oil after lift's running for six months.

8. When the lift needs to be dropped, press the up button and unload a slight rise, then release the down handle.

9. During the car maintenance, please cut off the power when the operator leave or the machine is not used.

1. Operate the up and down movement several times before placing vehicle on, and ensure the safety lock is in the correct place and the equipment is normal. Check all joints, especially the safety mechanism, to ensure that no abnormal things exist when the lift is used, such as if insurance device failure, lift should not be put into use.

2. Adjust the height of four rubber pad before lift is put into use so that all the supporting points maintained at the same high plane, while arms are extended in order to obtain more room for the convenience of vehicle to entry, open the shorter arm as far as possible to support the front (engine) direction.

3. Vehicles must be at the center of lift of the lifting range, when the vehicle get rise to 100mm from the ground, we should stop rising, and then waving cars to check whether the lift bearing is reasonable safety and lift operation is normal. If everything is normal, the lifting work could be starting.

4. In the lifting process, the operators and other personnel must stand in a safe area. When vehicles reach the required height, press the lock button to make the lift into the insurance state, then the maintenance staff could go on the following maintenance operations.

5. When maintenance staff is not working under the vehicle, the power must be cut off to prevent the accident caused by the misuse of non-operating personnel.

6. During the dropping process of the lift, the ground below the arms should be clean, otherwise the device will be damaged.

7. Add about 10L N46 hydraulic oil into the hydraulic pump tank or No. 8 (winter), No. 11 (Summer) diesel oil. Replace the hydraulic oil after lift's running for six months.

8. When the lift needs to be dropped, press the up button and unload a slight rise, then release the

down handle.

9. During the car maintenance, please cut off the power when the operator leave or the machine is not in use.

## 7. Equipment Maintenance and Repair

7.1 Day Care

| No. | Content of maintenance | Method | Sample drawing |
|---|---|---|---|
| ① | Check if two sliding body and four corbel are in the same horizontal plane | Adjust two wire nuts on the sliding mass to achieve level balance | 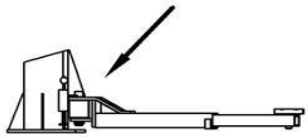 |
| ② | See if two landslide move smooth and do not shake, pull the insurance rope to see if the four insurance blocks are open at the same time | Clean the debris on the contact surface between the nylon slide of the sliding body and the column, plus butter-lubricating regularly, regulate the insurance wire rope | |
| ③ | See if the 4 insurance blocks are in the normal state | Automatically join in when rising or pressing the lock button, if the abnormal cases happen necessary adjustment should be done. | |
| ④ | See the joints of cylinders, tubing, fuel tank if there's no leakage | Clean and fix | |
| ⑤ | See power unit and the internal movement of the pumping station, the sound are normal or not | Ensure enough oil | 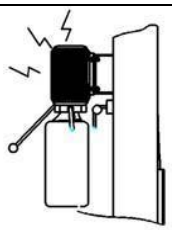 |
| ⑥ | View the parts connecting bolts, nuts of the lift are normal | Visual, hand-shaking to make re-strong Visual | |

7.2 Month Care

| No. | Content of maintenance | Method | Sample drawing |
|---|---|---|---|
| ① | Check if the rubber pad of the 4 arms are damaged or not | New replacement | 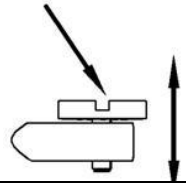 |
| ② | Check whether bolts, nuts, pins, etc. on all parts are normal | Reinforcement, clean-up or new replacement | |
| ③ | Check the shaft, sprocket, chain, wire wheels, wire rope position whether they are normal | Add butter lubrication, re-adjust | 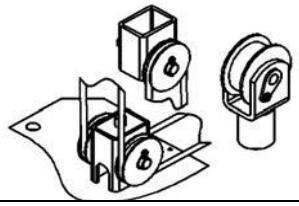 |
| ④ | Check the clean of sliding parts and safe insurance situation | Add butter Lubrication、re-adjust or new replacement | |
| ⑤ | Check hydraulic system connections and ensure no leakage of fuel tank | Visual and tighten with the wrench, and clean oil | |
| ⑥ | Check if the hydraulic oil is in the replaceable period or the hydraulic oil's | Replace or supplement the hydraulic oil if necessary | 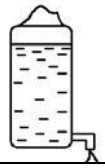 |
| ⑦ | To check whether the parts go rusty | Rust, oiling, painting | |

## 8. Methods to Avoid Common Problems

| Problem | Reason | How to avoid |
|---|---|---|
| Electrical failure which cause not working | Missing phase or electrical power failure | Check power supply fuses, contactor in the electrical junction box, micro switch, whether up key is damaged, if damaged replace the damaged components |
| Motor is roaring. | a. Impeller fan lid become deformed,<br>b. Capacitor is damaged,<br>c. Voltage is too low,<br>d. The equipment is overused. | a. Straighten the impeller fan lid<br>b. Change for a new capacitor<br>c. Look for electrician to check |
| There is crawling up phenomenon during lifting process | Shortage of oil due to air going to the hydraulic system | Repeatedly lift to remove the air, add oil to the tank |
| Two carriages doesn't go up synchronously | synchronous steel cable is slack | Re-adjust the steel cable, adjust the screw to tighten the steel cable and make the two carriages in the same level to achieve synchronization. |
| Lift noisily. | Sliding parts and rotating parts lack of lubricant, pin wear and tear is too large | Add lubricating oil to the relevant parts and,<br>Replace the damaged pin or slider |
| Can not lift up | ① Power Unit Fault<br>② Power Single-button device damage<br>③ Hydraulic system leakage | ① Repair or replace the damaged power unit<br>② Repair or replace the damaged button<br>③ Clean-up the hydraulic system, Repair the damaged parts or replace the damaged parts with new one |
| Rise slowly | ① Lack of hydraulic oil<br>② Leakage of hydraulic system<br>③ Filter blocking at Pump or the fuel tank connector | ① add hydraulic oil<br>② Repair, reinforce or replacement with new<br>③ dismantling the relevant blocked parts and cleaning |
| Can not be dropped | ① Insurance Block does not open<br>② Insurance rope is slack or reset springs loose elasticity | ①first rise, then drop, try more times.<br>②Maintenance or replacement with new parts. |

## 9. Instruction on Structure and Principle of the equipment

9.1 Main Structure of the Equipment:

Lifting structure: hydraulic cylinders installed in two columns. When the hydraulic oil goes into the cylinder under the cavity, the piston rod goes upward, moving the top sprocket through the chain to lift the carriage along the column. Supporting structure: when the car goes into the working area, through the angle and a telescopic arm length adjustment, the rubber pad might be adjusted to a valid car bearing position. You might also adjust the height of the rubber pad according to the height of car chassis. Balance structure: in the car operation process, in order to keep balance of the two carriages, the two steel cables will connect the two carriages to ensure synchronized movement. Security structure: Both of the columns are equipped with a security system, when the car is lifting, it is in an auto-insurance status.

9.2 Hydraulic System

a. Hydraulic schematics

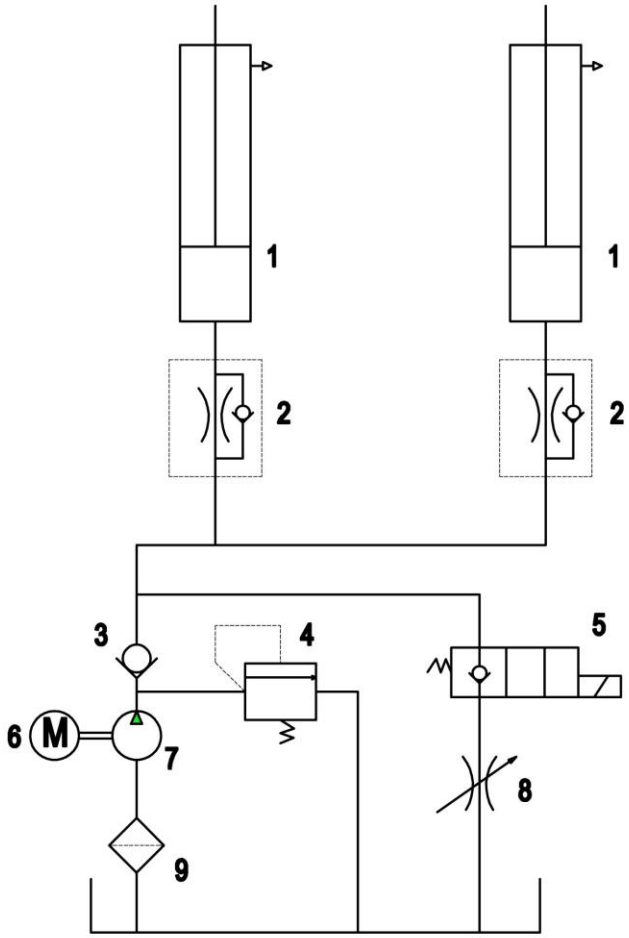


b.details

| No. | Name | No. | Name | No. | Name |
|---|---|---|---|---|---|
| 1 | cylinder | 4 | overflow valve | 7 | gear pump |
| 2 | one-way throttle valve | 5 | unloading valve | 8 | adjustable throttle valve |
| 3 | one-way valve | 6 | electric motor | 9 | filter |

a. Exploded View

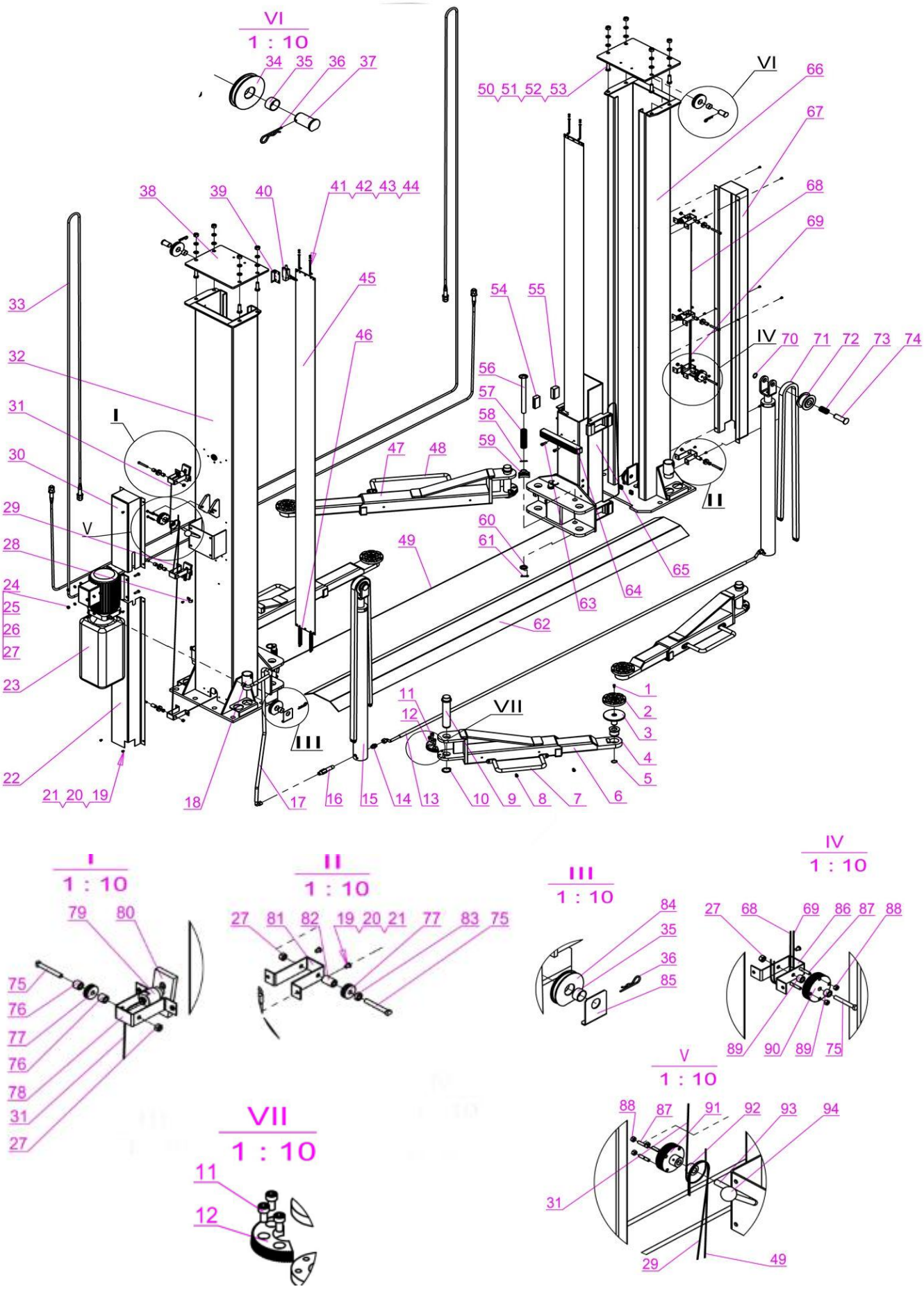

| No. | Name | Qty | No. | Name | Qty |
|---|---|---|---|---|---|
| 1 | M6*16 hexagon bolt | 4 | 48 | Long arm protector optional | 2 |
| 2 | Rubber pad | 4 | 49 | Release cable | 1 |
| 3 | Pad assembly | 4 | 50 | M14*45 | 8 |
| 4 | Pad screw | 4 | 51 | D14 flat washer | 8 |
| 5 | D24 circlip | 4 | 52 | D10 washer | 8 |
| 6 | Short arm assembly | 2 | 53 | M14 nut | 8 |
| 7 | Short arm protect assembly | 2 | 54 | Nylon block | 8 |
| 8 | M8*10 hexagon bolt | 8 | 55 | Nylon block | 8 |
| 9 | Arm pin | 4 | 56 | rod | 4 |
| 10 | D38 circlip | 4 | 57 | spring | 4 |
| 11 | M10*20 hexagon bolt | 12 | 58 | clip | 4 |
| 12 | Gear | 4 | 59 | Positioning gear | 4 |
| 13 | L=2775 hydraulic hose | 1 | 60 | Flat washer | 4 |
| 14 | Hose fitting | 2 | 61 | cottor | 4 |
| 15 | cylinder | 2 | 62 | cover | 1 |
| 16 | Throttle valve | 1 | 63 | M8*20 bolt | 4 |
| 17 | Hydraulic hose | 1 | 64 | Rubber protection | 2 |
| 18 | extension | 4 | 65 | Carriage assembly | 2 |
| 19 | M6*8 bolt | 31 | 66 | Sub column assembly | 1 |
| 20 | Flat washer | 31 | 67 | Sub column cover | 1 |
| 21 | Spring washer | 31 | 68 | Release cable(5) | 1 |
| 22 | Main cover | 1 | 69 | Lock cable(4) | 1 |
| 23 | Power unit | 1 | 70 | D 25 circlip | 2 |
| 24 | M8*25 bolt | 4 | 71 | chain | 2 |
| 25 | D8 flat washer | 4 | 72 | Chain pulley | 2 |
| 26 | D8 spring washer | 4 | 73 | Oiless bearing | 2 |
| 27 | M8 nut | 11 | 74 | Pulley chain axle | 2 |
| 28 | Hose clip | 1 | 75 | Release cable axle | 7 |
| 29 | Release cable | 1 | 76 | Spacer bush | 8 |
| 30 | Main column top cover | 1 | 77 | Release cable pulley | 6 |
| 31 | Release cable | 1 | 78 | Lock cable socket | 4 |
| 32 | Main column assembly | 1 | 79 | Safety latch assembly | 4 |
| 33 | L=8580 steel cable | 2 | 80 | insurance | 4 |
| 34 | Top cable pulley | 2 | 81 | Lock cable socket | 2 |
| 35 | Oiless bearing | 6 | 82 | Safety bush(2) | 2 |

| | | | | | |
|---|---|---|---|---|---|
| 36 | B clip | 4 | 83 | Safety bush(3) | 2 |
| 37 | Pulley axle | 2 | 84 | Bottom cable pulley | 4 |
| 38 | Top plate assembly | 2 | 85 | Cable protector | 2 |
| 39 | Limit switch socket | 1 | 86 | Lock cable socket(2) | 2 |
| 40 | Limit switch | 1 | 87 | Lock cable fixing rod | 6 |
| 41 | M5*90 hook | 4 | 88 | M6 nut | 6 |
| 42 | Flat washer | 4 | 89 | bush | 2 |
| 43 | D5 spring washer | 4 | 90 | Lock cable pulley(2) | 1 |
| 44 | M5 nut | 4 | 91 | Lock cable main pulley | 1 |
| 45 | Column cover optional | 2 | 92 | Main pulley bush | 1 |
| 46 | Spring | 4 | 93 | Safety rod | 1 |
| 47 | Long arm assembly | 2 | 94 | Plastic ball | 1 |